IPC/WG/22

REVISION PROJECT FILE/
DOSSIER DE PROJET DE RÉVISION

ELECTRICAL FIELD/
DOMAINE DE L'ÉLECTRICITÉ

IPC/A 009
ORIGINAL: English/French
DATE: 17.11.2009

WORLD INTELLECTUAL PROPERTY ORGANIZATION
ORGANISATION MONDIALE DE LA PROPRIÉTÉ INTELLECTUELLE

GENEVA/GENÈVE

COMMITTEE OF EXPERTS OF THE IPC UNION
COMITÉ D'EXPERTS DE L'UNION DE L'IPC

AL REVISION PROJECT FILE
DOSSIER DE PROJET RÉVISION NIVEAU ÉLEVÉ

PROPOSAL BY : **EP** **PROPOSITION DE :**	**IPC AREA:** **G01S 19/00** **DOMAINE DE LA CIB :**
RAPPORTEUR : **EP**	**TECHNICAL FIELD :** **E** **DOMAINE TECHNIQUE :**

ANNEX/ ANNEXE	CONTENT/CONTENU		ORIGIN/ ORIGINE	DATE
1	Decision of the subcommittee	Décision du cous-comité	IB	20.06.2007
2	Revision request with proposal	Demande de révision avec proposition	EP	30.08.2007
3	Comments	Observations	IB	08.10.2007
4	Comments	Observations	EP	11.10.2007
5	Proposal - scheme	Proposition - schéma	EP	11.10.2007
6	List of cross references	Liste des renvois	EP	12.10.2007
7	Comments	Observations	IB	14.11.2007
8	Comments	Observations	EP	19.11.2007
9	Working Group Decisions		IB	14.01.2008
10	Decision of the subcommittee	Décision du cous-comité	IB	23.01.2008
11	Rapporteur report	Rapport du rapporteur	EP	18.03.2008
12	Proposal - scheme	Proposition - schéma	EP	18.03.2008
13	Comments	Observations	CA	20.03.2008
14	Comments	Observations	JP	21.03.2008
15	Decision of the subcommittee	Décision du cous-comité	IB	14.04.2008
16	Proposal - scheme	Proposition - schéma	EP	14.05.2008

ANNEX/ ANNEXE	CONTENT/CONTENU		ORIGIN/ ORIGINE	DATE
17	Proposal - scheme	Proposition - schéma	EP	16.05.2008
18	Comments	Observations	US	05.06.2008
19	Comments	Observations	EP	24.06.2008
20	Proposal - scheme	Proposition - schéma	EP	29.07.2008
21	Comments	Observations	CA	21.08.2008
22	Comments	Observations	IB	25.08.2008
23	Decision of the subcommittee	Décision du cous-comité	IB	27.10.2008
24	Comments	Observations	EP	11.11.2008
25	Comments	Observations	CA	17.11.2008
26	Comments	Observations	JP	20.11.2008
27	Rapporteur summary for next ALS		EP	20.02.2009
28	Comments	Observations	EP	23.02.2009
29	Decision of the subcommittee	Décision du cous-comité	IB	24.03.2009
30	Rapporteur report	Rapport du rapporteur	EP	25.03.2009
31	Rapporteur proposal	Proposition du rapporteur	EP	25.03.2009
32	Technical Annexes		IB	31.03.2009
33	French version	Version française	IB	02.04.2009
34	List of cross references	Liste des renvois	IB	03.04.2009
35	Proposal - RCL	Proposition - RCL	IB	03.04.2009
36	Comments - French version	Observations - Version française	CA	08.04.2009
37	Comments - RCL and cross references	Observations - RCL et renvois	CA	08.04.2009
38	Comments - RCL and cross references	Observations - RCL et renvois	EP	21.04.2009
39	Comments - French version	Observations - Version française	FR	30.04.2009
40	Comments - French version	Observations - Version française	EP	26.05.2009
41	Proposal - definitions	Proposition - définitions	EP	29.05.2009
42	Comments - Definitions	Observations - Définitions	CA	04.06.2009
43	Comments - Definitions	Observations - Définitions	JP	13.07.2009
44	Rapporteur report	Rapport du rapporteur	EP	27.10.2009
45	Proposal - definitions	Proposition - définitions	EP	27.10.2009

ANNEX/ ANNEXE	CONTENT/CONTENU		ORIGIN/ ORIGINE	DATE
46	Comments	Observations	CA	02.11.2009

Principal Directorate Patent Grant Automation - Directorate Classification		
Project: **A009**	Subject: **GPS**	IPC: **G01S 19/00**
Rapporteur Report		26 October 2009

Ref.: **Annexes 32, 41-43 of project file**

Background

On the initial Definition proposal (A.41) comments were sent by CA (A.42) and JP (A.43).
CA expressed some **concern about the wording used in the section "Relationship ..."**, which in its actual form suggests that group 19/00 is the function-place for GPS technology, what is in evident contrast with the existence of groups 19/32-19/337, that are application-places indeed – NB: IPC numbering has changed in the meantime: please refer to annex 32 for the latest and adopted IPC numbering.
JP recalled that the wording used in that section was a "work-around" to replace an original Note that (in the Harmony phase of the project) was placed after group of "applications".
Some more specific issues were tackled by CA and JP, regarding the location/addition of some references.

Follow-up

R would like to thank CA for spotting the evident "contradiction" of the actual wording, as well as JP for retrieving the "history" of that wording.
R feels that any confusion could be avoided by rephrasing the section "Relationship ...", so as to overcome all CA objections and in line with the "original" scope of the text.
Incidentally, **R** notes that similar subgroups for "application-places" (G01S13/88, 15/88 and 17/88) already exist in G01S.
The following will be proposed:

Relationship between large subject matter areas *(* Definition statement ?)*

Satellite radio beacon positioning systems, of which GPS is the best known exponent, is a widely used technology.

This group and its subgroups, with the exception of the subgroups 19/14-19/19 (see below), are the "function-places" for such technology.

Subgroups 19/14-19/19 are "application-places for (GPS) receivers" insofar as they cover special characteristics of the (GPS) receivers, or specific constraints imposed on the receivers, so that they can adapt to the specific application. These subgroups do not cover the mere indication of the possible uses of a general GPS receiver.

The decision as to whether to classify in these groups will depend on the extent to which the invention relates to the core subject of these groups. Patent documents which deal with GPS merely as a "black box" to provide positioning information for use by the application, would not normally be classified in these groups.

Known applications of the technology are in the fields of surveying, navigation, network management, anti-theft and abduction and location based services – as listed in the section "Examples of places..." below.

(*) R wonders whether the whole text above should be placed under the Definition statement instead that under "Relationship ...".
Offices are invited to comment on the proposed re-wording as well as on the location of it: Definition or Relationship?

The other specific issues raised by CA & JP are quickly taken into account by relocating/adding the related references.

Roberto Iasevoli & Cillian Ó Donnabháin

IPC Revision WG – Definition Project	Project: **A009**
	Group: **G01S 19/00**
EPO Rapporteur Proposal	Date: 26-10-2009

G01S 19/00

Satellite radio beacon positioning systems; Determining position, velocity or attitude using signals transmitted by such systems

Definition statement

This group covers:

Satellite radio beacon positioning systems including receivers and elements cooperating therewith.
Determination of position, velocity or attitude using signals transmitted by such systems.

Relationship between large subject matter areas

Satellite radio beacon positioning systems, of which GPS is the best known exponent, is a widely used technology.

This group and its subgroups, with the exception of the subgroups 19/14-19/19 (see below), are the "function-places" for such technology.

Subgroups 19/14-19/19 are "application-places for (GPS) receivers" insofar as they cover special characteristics of the (GPS) receivers, or specific constraints imposed on the receivers, so that they can adapt to the specific application. These subgroups do not cover the mere indication of the possible uses of a general GPS receiver.

The decision as to whether to classify in these groups will depend on the extent to which the invention relates to the core subject of these groups. Patent documents which deal with GPS merely as a "black box" to provide positioning information for use by the application, would not normally be classified in these groups.

Known applications of the technology are in the fields of surveying, navigation, network management, anti-theft and abduction and location based services – as listed in the section "Examples of places..." below.

References relevant to classification in this group

This group does not cover:

Examples of places where the subject matter of this group is covered when used for a particular purpose, or incorporated in a larger system:

Apparatus for physical training, sports	A63B

Vehicle fittings for preventing or indicating unauthorised use or theft of vehicles	B60R 25/00
Surveying	G01C 15/00
Navigation	G01C 21/00
Electronic time-pieces for aspects of time-setting or synchronization	G04G 5/00, G04G 7/00
Alarms responsive to a single specified undesired or abnormal operating condition	G08B 21/00
Alarm systems in which the location of the alarm condition is signalled to a central station, e.g. fire or police telegraphic systems	G08B 25/00
Traffic control systems for road vehicles	G08G 1/00
Service making use of the location of users or terminals	H04W 4/02
Locating users or terminals for network management purposes	H04W 64/00

Informative references

Attention is drawn to the following places, which may be of interest for search:

Transmission systems for measured values	G08C
Aerials	H01Q
Automatic control of frequency or phase; synchronisation	H03L 7/00
Transceivers	H04B 1/38
Spread spectrum techniques in general using direct sequence modulation (DSM)	H04B 1/707
Printed circuits; casing or constructional details of electric apparatus	H05K

Glossary of terms

In this group, the following terms (or expressions) are used with the meaning indicated:

cooperating elements	designates additional elements or subsystems, including receivers of other users, which interact or communicate with the receiver or the satellite positioning system
time-stamped message	designates a message encoded with time of transmission for use in determining the signal travel time

Synonyms and Keywords

In patent documents the following abbreviations are often used:

AGPS	Assisted (or aided) GPS
DGPS	Differential GPS
IMU	Inertial Measurement Unit
INS	Inertial Navigation System
LAMBDA	Least-squares AMBiguity Decorrelation Adjustment
GLONASS	Global Orbiting Navigation Satellite System
GPS	Global Positioning System

The Canadian Intellectual Property Office CIPO OPIC L'Office de la propriété intellectuelle du Canada

Project Number	**: A009**
Class/Subclass	**: G01S 19**
Date	**: November 2, 2009**

CA thanks the Rapporteur for the revised Definition Proposal of Annex 45. The additional explanations included in the Definition Proposal remove the concerns expressed by CA in Annex 42. Hence, *CA approves the Definition Proposal of Annex 45.*

In Annex 44, the Rapporteur asked for comments as to which section ("Definition statement" or "Relationship between large subject matter areas") would be best to include "Satellite radio beacon positioning systems…would not normally be classified in these groups."

CA would maintain its approval in either case. Because no other subclasses are explicitly mentioned in the four paragraphs, they would perhaps be better in the "Definition statement", but on the other hand, this would leave only one paragraph (the fifth one) in the section "Relationship between large subject matter areas", and it might leave the reader a bit confused as to its message. The message is most clear when the five paragraphs are in the same section.

Claude Plante
Senior Patent Classification Examiner

IPC/A 012
ORIGINAL: English/French
DATE: 25.11.2009

WORLD INTELLECTUAL PROPERTY ORGANIZATION
ORGANISATION MONDIALE DE LA PROPRIÉTÉ INTELLECTUELLE

GENEVA/GENÈVE

COMMITTEE OF EXPERTS OF THE IPC UNION
COMITÉ D'EXPERTS DE L'UNION DE L'IPC

AL REVISION PROJECT FILE
DOSSIER DE PROJET RÉVISION NIVEAU ÉLEVÉ

PROPOSAL BY : **EP** **PROPOSITION DE :**	**IPC AREA:** **G06T 11/00-19/00** **DOMAINE DE LA CIB :**
RAPPORTEUR : **EP**	**TECHNICAL FIELD :** **E** **DOMAINE TECHNIQUE :**

ANNEX/ ANNEXE	CONTENT/CONTENU		ORIGIN/ ORIGINE	DATE
1	Proposal - scheme	Proposition - schéma	EP	26.11.2007
2	Working Group Decisions		IB	14.01.2008
3	Comments	Observations	US	19.03.2008
4	Comments	Observations	JP	25.03.2008
5	Comments	Observations	EP	26.03.2008
6	Comments	Observations	RU	31.03.2008
7	Comments	Observations	DE	31.03.2008
8	Comments	Observations	US	02.04.2008
9	Comments	Observations	JP	08.04.2008
10	Decision of the subcommittee	Décision du cous-comité	IB	14.04.2008
11	Proposal - standardised sequence		US	22.05.2008
12	Decision of the subcommittee	Décision du cous-comité	IB	27.10.2008
13	Rapporteur report	Rapport du rapporteur	EP	04.11.2008
14	Rapporteur proposal	Proposition du rapporteur	EP	04.11.2008
15	Comments	Observations	JP	11.11.2008
16	Rapporteur proposal	Proposition du rapporteur	EP	11.11.2008
17	Technical Annexes		IB	23.01.2009

ANNEX/ ANNEXE	CONTENT/CONTENU		ORIGIN/ ORIGINE	DATE
18	Comments	Observations	IB	30.01.2009
19	Comments	Observations	JP	09.02.2009
20	Rapporteur report	Rapport du rapporteur	EP	13.02.2009
21	Rapporteur proposal	Proposition du rapporteur	EP	13.02.2009
22			EP	16.02.2009
23	Comments	Observations	JP	10.03.2009
24	Decision of the subcommittee	Décision du cous-comité	IB	24.03.2009
25	List of cross references	Liste des renvois	IB	08.04.2009
26	Proposal - definitions	Proposition - définitions	EP	28.04.2009
27	Proposal - RCL	Proposition - RCL	EP	29.04.2009
28	French version	Version française	IB	29.04.2009
29	Comments - French version	Observations - Version française	EP	29.04.2009
30	Comments - French version	Observations - Version française	FR	20.05.2009
31	Comments - RCL and cross references, definitions	Observations - RCL et des renvois, definitions	JP	20.05.2009
32	Proposal - RCL	Proposition - RCL	EP	23.06.2009
33	Working Group Decisions		IB	30.07.2009
34	French version	Version française	FR	11.09.2009
35	Comments	Observations	DE	28.09.2009
36	Comments	Observations	JP	09.10.2009
37	Rapporteur report	Rapport du rapporteur	EP	22.10.2009
38	Proposal - definitions	Proposition - définitions	EP	22.10.2009
39	Comments	Observations	JP	10.11.2009
40	Comments	Observations	EP	23.11.2009
41	Comments	Observations	US	24.11.2009

IPC Revision WG – Definition Project	Project: A012
	Subclass: G06T
EPO Rapporteur Proposal	Date : 18/05/2009

G06T

Image data processing or generation, in general

Definition statement

This subclass covers:

Processor architectures or memory management for general purpose image data processing.

Geometric image transformations.

Image enhancement or analysis.

Image coding.

Two-dimensional image generation.

Three-dimensional image rendering, image modelling or manipulation for computer graphics.

Animation.

Relationship between large subject matter areas

None.

References relevant to classification in this subclass

This subclass does not cover:

Photogrammetry or videogrammetry	G01C 11/00
Computer-aided design	G06F 17/50
Reading or recognising printed or written characters or recognising patterns, e.g. fingerprints	G06K 9/00
Scanning, transmission or reproduction of documents or the like	H04N 1/00
Video signal compression	H04N 7/26

Examples of places where the subject matter of this class is covered when specially adapted, used for a particular purpose, or incorporated in a larger system:

Simulators for teaching or training purposes	G09B 9/00
Apparatus for radiation diagnosis	A61B 6/00
Car navigators, on-board computers	G01C 21/36

Places in relation to which this subclass is residual:

Informative references

Attention is drawn to the following places, which may be of interest for search:

Aspects of games using an electronically generated display having two or more dimensions	A63F 13/00
Visual indicators, displays	G09F
Arrangements or circuits for controlling visual indicators, characterised by the display of individual graphic patterns using a bit-mapped memory	G09G 5/36
Image-producing devices, digital cameras	H04N 5/225

Special rules of classification within this subclass

None.

Glossary of terms

In this subclass, the following terms (or expressions) are used with the meaning indicated:

2D	means two-dimensional
3D	means three-dimensional

Synonyms and Keywords

In patent documents the following abbreviations are often used:

LCD	Liquid Crystal Display
GUI	Graphical User Interface
VR	Virtual Reality
CAD	Computer-Aided Design
DCT	Discrete Cosine Transform

EXCERPT FROM DOCUMENT IPC/WG/21/2
EXTRAIT DU DOCUMENT IPC/WG/21/2

REPORT ON THE SEVENTH SESSION OF THE IPC ADVANCED LEVEL SUBCOMMITTEE

17. Since the seventh session of the ALS was the final one, all pending A projects were included in the program of the Working Group. From now on, A projects will designate revision projects originating from the IP5 Offices and C projects will designate revision projects that would be included in the IPC revision program by the Committee. For practical reasons, the schemes adopted by the ALS in the framework of projects A 012, A 013, A 014, A 017, A 018 and A 020 were included in the Technical Annexes of this session (see Technical Annexes 1 to 7 and 9 to this report).

IPC REVISION PROGRAM

General

25. The Working Group noted the decision by the Committee of Experts at its forty-first session that revision projects, including advanced level revision projects, would be considered by the Working Group and forwarded to the Committee for final adoption after completion. It was noted that projects originating from the Trilateral or the IP5 Offices cooperation will be designated by the letter “A” and revision projects included in the IPC revision program by the Committee will be designated by the letter “C” (see paragraph 17, above).

26. Discussions were based on compilations of the relevant revision project files. The Working Group considered nine pending C projects, plus 17 A projects forwarded from the former ALS, and approved amendments relating to those projects (see Technical Annexes 1 to 29 to this report relating to revision projects). The status of those projects and the list of future actions and deadlines are indicated in Annex III to this report.

IPC Revision Projects

27. The Working Group made the following observations with respect to the IPC revision projects. All references to annexes in this paragraph refer to annexes of the corresponding project file, unless otherwise stated.

Project A 012 (electrical) – The Working Group approved the French version of Annex 28, the Revision Concordance List (RCL) as proposed in Annex 32, and the amendments resulting from the List of Cross-Reference (CRL) in Annexes 28 and 25
(see Technical Annexes 1E and 1F to this report).

Comments were invited on the proposed definitions of Annex 26, to be followed by a revised rapporteur proposal.

RAPPORT SUR LA SEPTIÈME SESSION DU SOUS-COMITÉ CHARGÉ DU NIVEAU ÉLEVÉ DE LA CIB

17. Étant donné que la septième session de l'ALS était la dernière, tous les projets A en instance ont été inscrits au programme du groupe du travail. Dorénavant, les projets A désigneront les projets de révision émanant des offices de l'IP5 et les projets C désigneront les projets de révision qui seront inscrits au programme de révision de la CIB par le comité. Pour des raisons pratiques, les schémas adoptés par l'ALS dans le cadre des projets A 012, A 013, A 014, A 017, A 018 et A 020 ont été inclus dans les annexes techniques du rapport sur la session en cours (voir les annexes techniques 1 à 7 et 9 du présent rapport).

PROGRAMME DE RÉVISION DE LA CIB

Généralités

25. Le groupe de travail a pris note de la décision prise par le comité d'experts à sa quarante et unième session selon laquelle les projets de révision, y compris ceux relatifs au niveau élevé, seront examinés par le groupe de travail et transmis au comité pour adoption définitive une fois achevés. Il a été pris note du fait que les projets émanant des offices de la coopération trilatérale ou de l'IP5 seraient désignés par la lettre "A" et que les projets de révision inscrits au programme de révision de la CIB par le comité seraient désignés par la lettre "C" (voir le paragraphe 17).

26. Les délibérations ont eu lieu sur la base de synthèses des dossiers de projet correspondants. Le groupe de travail a examiné neuf projets C en instance ainsi que 17 projets A transmis par l'ancien ALS et a approuvé les modifications relatives à ces projets (voir les annexes techniques 1 à 29 du présent rapport relatives aux projets de révision). L'état d'avancement de ces projets et la liste des mesures à prendre et des délais correspondants font l'objet de l'annexe III du présent rapport.

Projets de révision de la CIB

27. Le groupe de travail a formulé les observations ci-après concernant les projets de révision de la CIB. Dans le présent paragraphe, tout renvoi à des annexes désigne, sauf indication contraire, les annexes du dossier de projet correspondant.

Project A 012 (électricité) – Le groupe de travail a approuvé la version française figurant à l'annexe 28, la table de concordance proposée à l'annexe 32 et les modifications résultant de la table des renvois croisés figurant dans les annexes 28 et 25 (voir les annexes techniques 1E et 1F du présent rapport).

Des observations ont été demandées sur les définitions proposées à l'annexe 26, en vue de l'établissement d'une proposition révisée du rapporteur.

ANNEX 1E G06T [Project-Rapporteur : A012/EP <WG21>]

CL M Subclass index

GENERAL PURPOSE IMAGE DATA PROCESSING **1/00**
GEOMETRIC IMAGE TRANSFORMATION IN THE PLANE OF THE IMAGE **3/00**
IMAGE ENHANCEMENT OR RESTORATION **5/00**
IMAGE ANALYSIS **7/00**
IMAGE CODING **9/00**
2D [TWO DIMENSIONAL] IMAGE GENERATION **11/00**
ANIMATION **13/00**
3D [THREE DIMENSIONAL] IMAGE RENDERING **15/00**
3D MODELLING FOR COMPUTER GRAPHICS **17/00**
MANIPULATING 3D MODELS OR IMAGES FOR COMPUTER GRAPHICS **19/00**

CL M **11/00** **2D [Two Dimensional] image generation**

CL M 11/20 · Drawing from basic elements, e.g. lines or circles

CL M 11/40 · Filling a planar surface by adding surface attributes, e.g. colour or texture

CL 11/60 `< Reinsert original entry 11/60>`

CL 11/80 `< Reinsert original entry 11/80>`

CL C ***13/00*** ***Animation***

AL N *13/20* · *3D [Three Dimensional] animation*

AL N *13/40* · · *of characters, e.g. humans, animals or virtual beings*

AL N *13/60* · · *of natural phenomena, e.g. rain, snow, water or plants*

AL	N	*13/80*	·	*2D animation, e.g. using sprites*
	CL	M	**15/00**	**3D [Three Dimensional] image rendering**
AL	N	*15/02*	·	*Non-photorealistic rendering*
AL	N	*15/04*	·	*Texture mapping*
AL	N	*15/06*	·	*Ray-tracing*
AL	N	*15/08*	·	*Volume rendering*
	CL		15/10	`< Reinsert original entry 15/10>`
CL	M	15/50	·	Lighting effects
AL	N	*15/55*	· ·	*Radiosity*
AL	M	15/60	· ·	Shadow generation
	CL	D	15/70	(transferred to **G06T 13/00-G06T 13/60**)
AL	N	*15/80*	· ·	*Shading*
AL	N	*15/83*	· · ·	*Phong shading*

AL N *15/87* · · · *Gouraud shading*

CL M **17/00** **3D modelling for computer graphics**

AL N *17/05* · *Geographic models*

CL M 17/10 · Volume description, e.g. cylinders, cubes or using CSG [Constructive Solid Geometry]

CL M 17/20 · Wire-frame description, e.g. polygonalisation or tessellation

CL M 17/30 · Surface description, e.g. polynomial surface description

CL D 17/40 (transferred to **G06T 19/00**-**G06T 19/20**)

CL D 17/50 (transferred to **G06T 17/05**)

CL N ***19/00*** ***Manipulating 3D models or images for computer graphics***

AL N *19/20* · *Editing of 3D images, e.g. changing shapes or colours, aligning objects or positioning parts*

ANNEXE 1F G06T **[Projet-Rapporteur : A012/EP] <WG21>**
[Tr.: IB]

CL M Schéma général
TRAITEMENT DE DONNÉES D'IMAGE, D'APPLICATION GÉNÉRALE **1/00**
TRANSFORMATION GÉOMÉTRIQUE DE L'IMAGE DANS LE PLAN DE L'IMAGE **3/00**
AMÉLIORATION OU RESTAURATION D'IMAGE **5/00**
ANALYSE D'IMAGE **7/00**
CODAGE D'IMAGE **9/00**
2D [BIDIMENSIONNELLES] GÉNÉRATION D'IMAGE **11/00**
ANIMATION **13/00**

3D [TRIDIMENSIONNELLES] RENDU D'IMAGES **15/00**
MODÉLISATION 3D POUR INFOGRAPHIE **17/00**
MANIPULATION DE MODÈLES OU D'IMAGES 3D POUR INFOGRAPHIE **19/00**

CL M **11/00** **Génération d'images 2D [bidimensionnelles]**

CL M 11/20 · Traçage à partir d'éléments de base, p.ex. de lignes ou de cercles

CL M 11/40 · Remplissage d'une surface plane par addition d'attributs de surface, p.ex. de couleur ou de texture

CL C ***13/00*** ***Animation***

AL N *13/20* · *Animation 3D [tridimensionnelle]*

AL N *13/40* · · *de personnages, p.ex. d'êtres humains, d'animaux ou d'êtres virtuels*

AL N *13/60* · · *de phénomènes naturels, p.ex. la pluie, la neige, l'eau ou les plantes*

AL N *13/80* · *Animation 2D [bidimensionnelle], p.ex. utilisant des motifs graphiques programmables*

CL M **15/00** **Rendu d'images 3D [tridimensionnelles]**

AL N *15/02* · *Rendu non photoréaliste*

AL N *15/04* · *Mappage de texture*

AL N *15/06* · *Lancer de rayon*

AL N *15/08* · *Rendu de volume*

CL M 15/50 · Effets de lumière

AL N *15/55* · · *Radiosité*

AL M 15/60 · · Génération d'ombres

CL D 15/70 (transféré en **G06T 13/00-G06T 13/60**)

AL N *15/80* · · *Ombrage*

AL N *15/83* · · · *Ombrage de type Phong*

AL N *15/87* · · · *Ombrage de type Gouraud*

CL M **17/00** **Modélisation 3D pour infographie**

AL N *17/05* · *Modèles géographiques*

CL M 17/10 · Description de volumes, p.ex. de cylindres, de cubes ou utilisant la GSC [géométrie solide constructive]

CL M 17/20 · Description filaire, p.ex. polygonalisation ou tessellation

CL M 17/30 · Description de surfaces, p.ex. description de surfaces polynomiales

CL D 17/40 (transféré en **G06T 19/00-G06T 19/20**)

CL D 17/50 (transféré en **G06T 17/05**)

CL N ***19/00*** ***Manipulation de modèles ou d'images 3D pour infographie***

AL N *19/20* · *Édition d'images 3D, p.ex. modification de formes ou de couleurs, alignement d'objets ou positionnements de parties*

ANNEXE 1F G06T **[Projet-Rapporteur : A012/EP] <WG21>**
[Tr.: IB]

CL M Schéma général
TRAITEMENT DE DONNÉES D'IMAGE, D'APPLICATION GÉNÉRALE **1/00**
TRANSFORMATION GÉOMÉTRIQUE DE L'IMAGE DANS LE PLAN DE L'IMAGE **3/00**
AMÉLIORATION OU RESTAURATION D'IMAGE **5/00**
ANALYSE D'IMAGE **7/00**
CODAGE D'IMAGE **9/00**
~~2D [BIDIMENSIONNELLES]~~ GÉNÉRATION D'IMAGE BIDIMENSIONNELLE (2D) **11/00**
ANIMATION **13/00**
~~3D [TRIDIMENSIONNELLES]~~ RENDU D'IMAGE~~S~~ TRIDIMENSIONNELLE (3D) **15/00**
MODÉLISATION ~~3D~~ TRIDIMENSIONNELLE (3D) POUR INFOGRAPHIE **17/00**
MANIPULATION DE MODÈLES OU D'IMAGES TRIDIMENSIONNELLES (3D) ~~3D~~ POUR INFOGRAPHIE **19/00**

Formatted: French France

CL M **11/00** **Génération d'image~~s~~ bidimensionnelle (2D) ~~[bidimensionnelles]~~**

Formatted: French France

Formatted: French France

Formatted: French France

CL M 11/20 · Traçage à partir d'éléments de base, p.ex. de lignes ou de cercles

CL M 11/40 · Remplissage d'une surface plane par addition d'attributs de surface, p.ex. de couleur ou de texture

CL C ***13/00*** ***Animation***

AL N *13/20* · *Animation ~~3D [~~tridimensionnelle~~]~~ (3D)*

AL N *13/40* · · *de personnages, p.ex. d'êtres humains, d'animaux ou d'êtres virtuels*

AL N *13/60* · · *de phénomènes naturels, p.ex. la pluie, la neige, l'eau ou les plantes*

AL N *13/80* · *Animation ~~2D [~~bidimensionnelle~~],~~ (2D), p.ex. utilisant des motifs graphiques programmables*

CL M **15/00** **Rendu d'images ~~3D [~~tridimensionnelles~~]~~ (3D)**

AL N *15/02* · *Rendu non photoréaliste*

AL N *15/04* · *Mappage de texture*

AL N *15/06* · *Lancer de rayon*

AL N *15/08* · *Rendu de volume*

CL M 15/50 · Effets de lumière

AL N *15/55* · · *Radiosité*

AL M 15/60 · · Génération d'ombres

CL D 15/70 (transféré en **G06T 13/00**-**G06T 13/60**)

AL N *15/80* · · *Ombrage*

AL N *15/83* · · · *Ombrage de type Phong*

AL N *15/87* · · · *Ombrage de type Gouraud*

CL M **17/00** **Modélisation ~~3D~~ tridimensionnelle (3D) pour infographie**

Formatted: French France

Formatted: French France

AL N *17/05* · *Modèles géographiques*

CL M 17/10 · Description de volumes, p.ex. de cylindres, de cubes ou utilisant la GSC [géométrie solide constructive]

CL M 17/20 · Description filaire, p.ex. polygonalisation ou tessellation

CL M 17/30 · Description de surfaces, p.ex. description de surfaces polynomiales

CL D 17/40 (transféré en **G06T 19/00**-**G06T 19/20**)

CL D 17/50 (transféré en **G06T 17/05**)

CL N ***19/00*** ***Manipulation de modèles ou d'images tridimensionnelles (3D) pour infographie***

AL N *19/20* · *Édition d'images ~~3D~~tridimensionnelles (3D), p.ex. modification de formes ou de couleurs, alignement d'objets ou positionnements de parties*

DEUTSCHES PATENT- UND MARKENAMT German Patent and Trade Mark Office	Class/Subcl.: **G06T** Date: 28.09.2009
DE - Comments — A 012	

Re: Annex 26

DE welcomes the definition proposal of the EP Rapporteur for this subclass and provides the following comment:

1) Chapter "References relevant to classification in this subclass"

a) Section "*This subclass does not cover:"*

The wording of the reference to H04N 7/26 should be more precise, to emphasize the distinction between image compression (in G06T) and the video signal compression within transmission of television signals**:**

video signal compression within transmission of television signals	**H04N 7/26**

b) Section "*Examples of places where the subject matter is covered when specially adapted:*"

We propose to add following references:

Measuring by using optical means (to emphasize the distinction to G06T 7/60)	**G01B 11/00**
Traffic control systems for road vehicles	**G08G 1/00**

2) Our experts suggest to add a new reference, to clarify the relation to **G03H 1/00** (**G03H 1/08)**, because a hologram is also 3D-image and there is a reference to G06T. We aren't so sure about the type of this new reference, whether limiting or informative:

Holohraphic processes;Synthesising holograms (to emphasize the distinction to G06T 15/00, 17/00)	**G03H 1/00; G03H 1/08**

Raluca Koch

JAPAN PATENT OFFICE October 9, 2009

Project: A012 Subclass: G06T

Comment

Ref: Annex 35

JP thanks for the discussion on this project, and has taken due note of DE comment in Annex 35.

As JP claimed in Annex 31, JP is concerned that the use of different wordings than the title of IPC groups in the references would tend to cause confusion on the part of users and, therefore, should be avoided.

Having reiterated this point, JP can agree with the addition of references to:

G01B 11/00, G03H 1/00, G03H 1/08 and G08G 1/00,

on condition that all of them be added to the listing of “Informative references” section and that the IPC title of each group be employed for the first three groups. The last one was proposed by DE with the IPC title.

As concerns H04N 7/26, however, JP cannot agree with adding this group as a reference involved in this subclass G06T.

[END]

Principal Directorate Patent Grant Automation - Directorate Classification		
Project: **A012**	Subject: **Image data processing ...**	IPC Subclass: **G06T**
Rapporteur Report		22 October 2009

Ref: Annexes 26, 31, 35, 36 of the project file

Definition - English version (A.26)

A subclass definition was proposed in A.26; comments were sent by JP (A.31 and A.36) and DE (A.35).
As to the listed references, JP stated (in both A.31 and A.36) that they would oppose to the use of wordings other than those used in the IPC scheme – to avoid confusion among users. They also gave "the" list of the references they like to be quoted under G06T.
DE asked for re-wording the reference pointing to group H04N 7/26; JP objected (A.36).
DE also asked for addition of references to G01B 11/00, G03H 1/00, G03H 1/08 and G08G 1/00. JP approved under the condition that they would be listed as Informative References and with their original IPC title.
Finally JP (A.31) asked for Definitions for main groups 11/00-19/00, to be drafted as discussed under Harmony project T023, while taking documents T023_A.51-A.53 into account.

R revised proposal

R can agree with most of the DE & JP comments, but not all of them.
JP did not quote the "**Limiting reference" to G06K 9/00**: this limiting reference clearly stems from the **existing Note (2), 2nd bullet, after G06T**. **R** cannot see any reasons (at the moment) to remove the reference. Attention is also drawn to the ongoing Definition project D167 for G06K.
R agrees with JP that the **reference to H04N 7/26 can be removed**: attention is drawn though to the **reference after group G06T 9/00 pointing to "compression for image communication H04N"**.
R still considers that some of the "Informative references" proposed by JP in A.31 are "Special adaptations" rather: see for example the reference "Aspects of games using an electronically generated display having two or more dimensions A63F 13/00". Having said that, **R** sees no big harm to change the category of these references, till counter advise of other offices.
R agrees with DE & JP as to the addition of Informative references to G01B 11/00, G03H 1/00, G03H 1/08 and G08G 1/00.
Finally, **R** (after consultation of the EPO expert) is adding Definitions for groups 11/00-19/00 as well. **R** feels that sentences used during the Harmony phase of the kind "Subject matter comprising means or steps for generating ..." are better rephrased in IPC Definition language as "Generating ...": this is the wording that is consistently being used in the revised proposal.

Roberto Iasevoli & Eduardo Perez Molina

IPC Revision WG – Definition Project	Project: A012
	Subclass: G06T
EPO Rapporteur Proposal	Date : 11/11/2009

G06T

Image data processing or generation, in general

Definition statement

This subclass covers:

Processor architectures or memory management for general purpose image data processing.

Geometric image transformations.

Image enhancement or analysis.

Image coding.

Two-dimensional image generation.

Three-dimensional image rendering, image modelling or manipulation for computer graphics.

Animation.

Relationship between large subject matter areas

None.

References relevant to classification in this subclass

This subclass does not cover:

Photogrammetry or videogrammetry	G01C 11/00
Computer-aided design	G06F 17/50
Reading or recognising printed or written characters or recognising patterns, e.g. fingerprints	G06K 9/00
Scanning, transmission or reproduction of documents or the like	H04N 1/00

Examples of places where the subject matter of this subclass is covered when specially adapted, used for a particular purpose, or incorporated in a larger system:

Informative references

Attention is drawn to the following places, which may be of interest for search:

Apparatus for radiation diagnosis	A61B 6/00
Aspects of games using an electronically generated display having two or more dimensions	A63F 13/00
Holographic processes or apparatus using light, infra-red, or ultra-violet waves for obtaining holograms or for obtaining an image from them; Synthesising holograms	G03H 1/00 G03H 1/08
Simulators for teaching or training purposes	G09B 9/00
Displaying; Advertising; Signs; Labels or Name-plates; Seals	G09F
Measuring, by optical means, length, thickness or similar linear dimensions, angles, areas, irregularities of surfaces or contours	G01B 11/00
Traffic control systems for road vehicles	G08G 1/00
Control arrangements or circuits for visual indicators common to cathode-ray tube indicators and other visual indicators characterised by the display of individual graphic patterns using a bit-mapped memory	G09G 5/36
Television cameras	H04N 5/225
Television systems; Colour television systems	H04N 7/00 H04N 11/00

Glossary of terms

In this subclass, the following terms (or expressions) are used with the meaning indicated:

2D	means two-dimensional
3D	means three-dimensional

Synonyms and Keywords

In patent documents the following abbreviations are often used:

CAD	Computer-Aided Design
DCT	Discrete Cosine Transform
GUI	Graphical User Interface
LCD	Liquid Crystal Display
AR	Augmented Reality
MR	Mixed reality
VR	Virtual Reality

G06T 11/00

2D [Two Dimensional] image generation

Definition statement

This group covers:

Generating or modifying a displayable 2D object or shape.

Texturing; Colouring; Determination of texture or colour.

Drawing from basic elements, e.g. lines, circles or charts.

Filling a planar surface by adding surface attributes, e.g. colour or texture.

Editing figures and text; Combining figures or text.

References relevant to classification in this group

This group does not cover:

Examples of places where the subject matter of this group is covered when specially adapted, used for a particular purpose, or incorporated in a larger system:

Informative references

Attention is drawn to the following places, which may be of interest for search:

Input arrangements or combined input and output interaction between user and computer	G06F 3/01
Digital computing or data processing equipment or methods, specially adapted for text processing	G06F 17/21

G06T 13/00

Animation

Definition statement

This group covers:

Displaying a sequence of images of artwork or model positions in order to create the effect of movement in a scene.

Animation of data presenting a 3D or 2D image model or object.

Animation of characters exhibiting lifelike motions or behaviours.

Animation of images associated with natural phenomena.

References relevant to classification in this group

This group does not cover:

Examples of places where the subject matter of this group is covered when specially adapted, used for a particular purpose, or incorporated in a larger system:

Informative references

Attention is drawn to the following places, which may be of interest for search:

Morphing techniques per se	G06T 3/00
3D modelling for computer graphics	G06T 17/00

G06T 15/00

3D [Three Dimensional] image rendering

Definition statement

This group covers:

Generating a displayable image from a 3D model or 3D data set. A 3D data set may include "voxel" data.

Rendering an image in a style intended to look like a painting or drawing.

Applying or mapping surface details or colour patterns to a 3D geometry or model.

Functional or operational structures of 3D image rendering systems.

Rendering a 3D image by tracing rays from viewpoint through each pixel to a visible point on an object.

Rendering an image of a 3D object using a set of 2D images of it.

Determining which surfaces of a graphic object are visible from a certain viewpoint and optionally removing them.

Determining intensity or colour on a surface of an object based on interaction of light with the object.

References relevant to classification in this group

This group does not cover:

Examples of places where the subject matter of this group is covered when specially adapted, used for a particular purpose, or incorporated in a larger system:

Informative references

Attention is drawn to the following places, which may be of interest for search:

Visualization of 3D model without surface characteristics or attributes	G06T 17/00
Stereoscopic television systems; details thereof	H04N 13/00

Synonyms and Keywords

In patent documents the following abbreviations are often used:

IBR	Image Based Rendering
Voxel	blend of the words Volume and Pixel, stands for "volume element"
Z-Buffer	Depth Buffer

G06T 17/00

3D [Three Dimensional] modelling for computer graphics

Definition statement

This group covers:

Generation of a data representation of a shape of a 3D object before any rendering attempt. The data representation of a shape of a 3D object may include a mathematical representation or data structure.

Modelling of 3D geographical data.

Modelling using volumes, wire-frame elements or surfaces.

References relevant to classification in this group

This group does not cover:

Examples of places where the subject matter of this group is covered when specially adapted, used for a particular purpose, or incorporated in a larger system:

Informative references

Attention is drawn to the following places, which may be of interest for search:

Moulding by stereo-lithography. i.e. physical 3D modelling	B29C 67/00
Finite element method or analysis	G06F 17/50
Models for scientific, medical, or mathematical purposes, e.g. full-sized devices for demonstration purposes; Models for other purposes	G09B 23/00 G09B 25/00
Maps; Plans; Charts; Diagrams, e.g. route diagrams	G09B 29/00

G06T 19/00

Manipulating 3D models or images for computer graphics

Definition statement

This group covers:

Manipulating a 3D model or image for computer graphics.

Editing 3D models or images.

References relevant to classification in this group

This group does not cover:

Examples of places where the subject matter of this group is covered when specially adapted, used for a particular purpose, or incorporated in a larger system:

Informative references

Attention is drawn to the following places, which may be of interest for search:

Visualisation of the interior of objects by transmitting ultrasonic or sonic waves through the object	G01N 29/00
Interaction techniques for graphical user interfaces, e.g. interaction with windows, icons or menus	G06F 3/048
Digital computing or data processing equipment or methods, specially adapted for text processing	G06F 17/21

JAPAN PATENT OFFICE November 10, 2009

Project: A012 Subclass: G06T

Comment

JP thanks EP Rapporteur for the latest Report and revised proposal - Definitions (Annexes 37 and 38) taking our comments into account. JP would support the Definitions in Annex 38 with the exception of the following three points.

1. In the Definition statement for subclass G06T per se, there is a line reading "Three-dimensional image rendering, image modelling or manipulation for computer graphics." As JP already pointed it out in Annex 31, the phrase of "image modelling" is not appropriate and the term "image" should be removed and made to read as follows.

   "Three-dimensional image rendering, modelling or manipulation for computer graphics."

2. In the Definition statement for main group G06T 11/00, the line of "Texturing; Colouring; Cetermination of the texture or colour" is not clear as to what techniques are meant to cover. Besides, two lines below is there a description reading "Filling a planar surface by adding surface attributes, e.g. colour or texture." It does not seem to JP that there is clear difference or distinction between these two lines. Therefore, JP is of the opinion that the former line should be totally deleted.

3. As an Informative reference for main group G06T 15/00, there is listed "Visualization of 3D model without surface characteristics or attributes: G06T 17/00." It does not seem to JP that this description is appropriate in the circumstances. JP is of the opinion that this entry should be removed from the list of Informative references.

[END]

United States Patent and Trademark Office

Project: A012 Subclass: G06T Date: November 18, 2009

Ref.: Annexes 37, 38 and 39 of project file

Comments

US thanks Rapporteur for the latest Rap. report and Rap. proposal of Annexes 37 and 38 respectively and completely approves both reports. Regarding JP comments in Annex 39, US submits the following comments.

1.) Regarding the JP's proposed language "Three-dimensional image rendering, modeling or manipulation for computer graphics", US approves JP's suggestion.

2.) Regarding the JP's question it is not clear what techniques are meant to cover "Texturing; Colouring; Determination of texture or colour", our experts believe that any techniques that can be used in generation and/or determination of texture or colour for a 2D image would be appropriate under the main group G06T 11/00.

3.) The reasons for the JP's objection to the informative reference "Visualization of 3D model without surface characteristics or attributes: G06T 17/00" is unclear. Our experts believe this reference is additional useful information and US has no objection as to its citation under the definition for main group G06T 15/00.

[END]

IPC/A 014
ORIGINAL: English/French
DATE: 19.11.2009

WORLD INTELLECTUAL PROPERTY ORGANIZATION
ORGANISATION MONDIALE DE LA PROPRIÉTÉ INTELLECTUELLE

GENEVA/GENÈVE

COMMITTEE OF EXPERTS OF THE IPC UNION
COMITÉ D'EXPERTS DE L'UNION DE L'IPC

AL REVISION PROJECT FILE
DOSSIER DE PROJET RÉVISION NIVEAU ÉLEVÉ

PROPOSAL BY : **EP** **PROPOSITION DE :**	**IPC AREA:** **H04N 21/00** **DOMAINE DE LA CIB :**
RAPPORTEUR : **EP**	**TECHNICAL FIELD :** **E** **DOMAINE TECHNIQUE :**

ANNEX/ ANNEXE	CONTENT/CONTENU		ORIGIN/ ORIGINE	DATE
1	Decision of the subcommittee	Décision du cous-comité	IB	14.04.2008
2	Rapporteur proposal	Proposition du rapporteur	EP	09.07.2008
3	Comments	Observations	US	08.09.2008
4	Comments	Observations	JP	10.09.2008
5	Comments	Observations	RU	20.10.2008
6	Decision of the subcommittee	Décision du cous-comité	IB	27.10.2008
7	Comments	Observations	IB	22.01.2009
8	Comments	Observations	RU	09.02.2009
9	Comments	Observations	EP	16.02.2009
10	Rapporteur report	Rapport du rapporteur	EP	16.02.2009
11	Proposal - scheme	Proposition - schéma	EP	16.02.2009
12	Proposal - RCL	Proposition - RCL	EP	16.02.2009
13	Rapporteur summary for next ALS		EP	17.02.2009
14	Technical Annexes		IB	21.02.2009
15	Decision of the subcommittee	Décision du cous-comité	IB	24.03.2009
16	Proposal - RCL	Proposition - RCL	IB	08.04.2009
17	List of cross references	Liste des renvois	IB	08.04.2009

ANNEX/ ANNEXE	CONTENT/CONTENU		ORIGIN/ ORIGINE	DATE
18	Comments	Observations	JP	21.05.2009
19	French version	Version française	EP	02.06.2009
20	Rapporteur proposal	Proposition du rapporteur	EP	09.03.2009
21	Comments	Observations	JP	29.05.2009
22	Rapporteur report	Rapport du rapporteur	EP	29.05.2009
23	Working Group decision	Décision du groupe de travail	IB	03.08.2009
24	Proposal of removal of non-limiting references		EP	20.03.2009
25	Comments	Observations	EP	29.10.2009
26	Comments	Observations	FR	04.11.2009
27	French version	Version française	EP	13.11.2009

Principal Directorate Patent Grant Automation - Directorate Classification		
Project: A014 / C454	**Subject:** Selective content distribution	**IPC range:** H04N 21
Draft French Version		**29 May 2009**

CL C ***5/00 Détails des systèmes de télévision (détails du balayage ou leur combinaison avec la production des tensions d'alimentation H04N 3/00; spécialement adaptés à la télévision en couleurs H04N 9/00; serveurs spécialement adaptés à la distribution de contenu H04N 21/20 ; clients spécialement adaptés à la réception ou l'interaction avec du contenu H04N 21/40)***

CL C ***7/00 Systèmes de télévision (détails H04N 3/00, H04N 5/00 ~~;~~, spécialement adaptés à la télévision en couleurs H04N 11/00; systèmes de télévision stéréoscopiques H04N 13/00; distribution sélective de contenu H04N 21/00)***

CL C ***7/16 · ~~Systèmes à secret; Systèmes à abonnement~~ Systèmes à secret analogiques ; Systèmes à abonnement analogiques (systèmes à secret numériques ; systèmes à abonnement numériques H04N 21/00)***

CL C ***7/24 · Systèmes pour la transmission de signaux de télévision utilisant la modulation par impulsions codées (H04N 21/00 a priorité)***

CL C ***7/52 · · Systèmes pour la transmission d'un signal vidéo modulé par impulsions codées avec d'autres signaux modulés par impulsions codées, p.ex. un signal audio ou un signal de synchronisation (assemblage d'un flux multiplexé en combinant un flux vidéo avec d'autres contenus ou données additionnelles, remultiplexage de flux multiplexés, insertion de bits de rembourrage dans le flux multiplexé, assemblage d'un flux élémentaire paquetisé au serveur H04N 21/236 ; désassemblage d'un flux multiplexé, remultiplexage de flux multiplexés, extraction ou traitement d'informations de service, désassemblage d'un flux élémentaire paquetisé au client H04N 21/434)***

AL D 7/58 (transféré vers H04N 21/2365,H04N 21/434)

AL D 7/60 (transféré vers H04N 21/236,H04N 21/434)

AL D 7/62 (transféré vers H04N 21/242,H04N 21/431,H04N 21/434,H04N 21/8547)

CL N ***21/00 Distribution de contenu sélective, p.ex. télévision interactive, VOD [Vidéo à la demande] (radiodiffusion H04H; dispositions, appareils, circuits ou systèmes pour la commande ou le traitement de la communication caractérisés par un protocole H04L 29/06; transmission bidirectionnelle de donnés vidéo en temps réel H04N 7/14)***

1. CL N ***Note***
21/00 **Ce groupe couvre :**

- **Procédés de distribution vidéo interactives, ou leurs éléments, caractérisés par une configuration de système point à multipoint et qui sont principalement employés pour la distribution ou diffusion unidirectionnelle de données vidéo provenant d'interactions entre opérateurs système (fournisseurs d'accès ou de services) ou utilisateurs (abonnés) et éléments système**
- **De tels systèmes comprennent des systèmes de communication dédiés, tels que des systèmes de diffusion de télévision, qui distribuent ou délivrent des données vidéo de la façon indiquée, et qui peuvent, de plus, proposer un cadre pour d'autres communications ou services divers sous forme unidirectionnelle ou bidirectionnelle. Cependant, la vidéo occupera la majeure partie de la bande passante dans le processus de distribution.**
- **Typiquement, des opérateurs système interagissent avec des éléments du transmetteur ou des utilisateurs interagissent avec des éléments du récepteur dans le but de faciliter, par interaction avec de tels éléments, le contrôle dynamique du traitement ou du flux de données à des points variés du système. Cette interaction est typiquement de nature occasionnelle ou intermittente.**
- ***Processus, systèmes ou éléments, particulièrement adaptés à la génération, distribution et au traitement de données, qui sont soit associées au contenu vidéo (p.ex. metadonnées, évaluations) ou liées à l'utilisateur ou son environnement et qui ont été rassemblées de façon active ou passive. Ces données sont employées pour faciliter l'interaction ou modifier ou cibler le contenu.*** **[nouveau.]**

2. ***Dans ce groupe, la règle de la priorité à la première place est appliquée, c.à.d. à chaque niveau hiérarchique, la classification se fait à la première place appropriée.*** **[nouveau.]**

AL N ***21/20*** · *Serveurs spécifiquement adaptés pour la distribution de contenu, p.ex. serveurs VOD; Leurs opérations*

AL N ***21/21*** · · ***Eléments de serveur ou architectures de serveur***

AL N ***21/214*** · · · ***Plate-forme spécialisée de serveur, p.ex. serveur situé dans un avion, hôtel, hôpital***

AL N ***21/218*** · · · *Source du contenu audio ou vidéo, p.ex. réseau de disques local*

**AL N *21/2183* · · · · *Mémoire cache*

AL N *21/2187* · · · · ***Transmission en direct*

AL N *21/222* · · · ***Serveurs secondaires, p.ex. serveur proxy, tête de télévision par câble*

AL N *21/2225* · · · · ***Serveurs VOD locaux*

**AL N *21/226* · · · *Eléments internes de serveur*

AL N *21/23* · · ***Traitement du contenu ou des données additionnelles; Opérations élémentaires de serveur; intergiciel de serveur*

**AL N *21/231* · · · *Opération de stockage de contenu, p.ex. cache de films pour stockage à court terme, réplication de données sur plusieurs serveurs, priorisation de données pour l'effacement*

**AL N *21/2312* · · · · *Placement de données sur le réseau de disques*

AL N *21/2315* · · · · · ***utilisant l'entrelacement*

AL N *21/2318* · · · · · ***utilisant la mise en bande*

**AL N *21/232* · · · *Opération de récupération de contenu au sein d'un serveur, p.ex. lecture de flux vidéo du réseau de disques*

AL N *21/233* · · · *Traitement de flux audio élémentaires*

AL N *21/234* · · · *Traitement de flux vidéo élémentaires, p.ex. raccordement de flux vidéo, manipulation de graphes de scènes MPEG-4 (procédés de codage ou transcodage vidéo per se H04N7/26)*

AL N *21/2343* · · · · *impliquant des opérations de reformatage de signaux vidéo pour la distribution ou la mise en conformité avec les requêtes des utilisateurs finaux ou les exigences des dispositifs des utilisateurs finaux*

AL N *21/2347* · · · · *impliquant le cryptage de flux vidéo (dispositions pour les communications secrètes ou protégées H04L 9/00; systèmes à secret analogiques H04N7/16)*

AL N *21/235* · · · *Traitement de données additionnelles, p.ex. brouillage de données additionnelles, traitement de descripteurs de contenu*

AL N *21/236* · · · *Assemblage d'un flux multiplexé, p.ex. flux de transport, en combinant un flux vidéo avec d'autres contenus ou données additionnelles, p.ex. insertion d'un localisateur de ressources universel [URL] dans un flux vidéo, multiplexage de données de logiciel dans un flux vidéo; remultiplexage de flux multiplexés; insertion de bits de rembourrage dans le flux multiplexé, p.ex. pour obtenir un débit constant; assemblage d'un flux élémentaire paquetisé*

AL N *21/2362* · · · · *Génération ou traitement d'informations de service [SI]*

AL N *21/2365* · · · · *Multiplexage de plusieurs flux vidéo*

AL N *21/2368* · · · · *Multiplexage de flux audio et vidéo*

AL N 21/237 · · · *Communication avec un serveur de données additionnelles*

AL N 21/238 · · · *Interfacage de la voie descendante du réseau de transmission, p.ex. adaptation du débit de transmission d'un flux vidéo à la bande passante du réseau; Traitement de flux multiplexés*

AL N 21/2381 · · · · *Adaptation du flux multiplexé à un réseau spécifique, p.ex. un réseau à protocole Internet [IP]*

AL N 21/2383 · · · · *Codage de canal d'un flux binaire numérique, p.ex. modulation*

AL N 21/2385 · · · · *Allocation de canaux (H04N21/266 a priorité); Allocation de bande passante (H04N 21/24 a priorite)*

AL N 21/2387 · · · · *Traitement de flux en réponse à une requête de reproduction par un utilisateur final, p.ex. pour la lecture à vitesse variable ('trick play')*

AL N 21/2389 · · · · *Traitement de flux multiplexé, p.ex. cryptage de flux multiplexé*

AL N 21/239 · · · *Interfaçage de la voie montante du réseau de transmission, p.ex. priorisation des requêtes de clients*

AL N 21/24 · · · *Surveillance de procédés ou ressources, p.ex. surveillance de la charge du serveur, de la bande passante disponible, des requêtes effectuées sur la voie montante*

AL N 21/241 · · · *Procédés de systèmes d'exploitation, p.ex. initialisation du serveur (dispositions pour la commande par programme G06F9/00)*

AL N 21/242 · · · *Procédés de synchronisation, p.ex. traitement de références d'horloge de programme [PCR]*

AL N 21/25 · · *Opérations de gestion réalisées par le serveur pour faciliter la distribution de contenu ou administrer des données liées aux utilisateurs finaux ou dispositifs clients, p.ex. authentification des utilisateurs finaux ou des dispositifs clients, apprentissage des préférences des utilisateurs pour recommender des films*

AL N 21/254 · · · *Gestion au sein du serveur de données additionnelles, p.ex. serveur d'achat, serveur de gestion de droits*

AL N *21/2543* · · · · ***Facturation* (*schémas, architectures ou protocoles de paiement G06Q 20/00; commerce électronique G06Q 30/00*)**

AL N *21/2547* · · · · · ***Facturation de tiers, p.ex. facturation d'un publicitaire***

AL N 21/258 · · · *Gestion de données liées aux clients ou aux utilisateurs finaux, p.ex. gestion des capacités des clients, préférences ou données démographiques des utilisateurs, traitement des multiples préférences des utilisateurs finaux pour générer des données collaboratives*

AL N 21/262 · · · *Ordonnancement de la distribution de contenus ou de données additionnelles, p.ex. envoi de données additionnelles en dehors des périodes de pointe, mise à jour de modules de logiciel, calcul de la fréquence de transmission de carrousel, retardement de la transmission de flux vidéo, génération de listes de reproduction*

AL N 21/266 · · · *Gestion de canal ou de contenu, p.ex. génération et gestion de clés et de messages de titres d'accès dans un système d'accès conditionnel, fusion d'un canal de monodiffusion de VOD dans un canal multidiffusion*

AL N *21/2662* · · · · *Contrôle de la complexité du flux vidéo, p.ex. en mettant à l'échelle la résolution ou le débit du flux vidéo en fonction des capacités du client*

AL N *21/2665* · · · · *Rassemblement de contenus provenant de différentes sources, p.ex. Internet et satellite*

AL N *21/2668* · · · · *Création d'un canal pour un groupe dédié d'utilisateurs finaux, p.ex. en insérant des publicités ciblées dans un flux vidéo en fonction des profils des utilisateurs finaux*

AL N *21/27* · · *Applications pour utilisateurs finaux basées sur un serveur*

AL N *21/274* · · · *Stockage de contenu ou données additionnelles spécifiques aux utilisateurs finaux en réponse aux requêtes des utilisateurs finaux*

AL N *21/2743* · · · · *Hébergement vidéo de données téléchargées vers l'amont du client*

AL N *21/2747* · · · · *Stockage à distance de programmes vidéo reçus via la voie descendante, p.ex. du serveur*

AL N *21/278* · · · *Base de données de descripteurs de contenu ou service de répertoire pour accès par les utilisateurs finaux*

AL N *21/40* · *Dispositifs clients spécifiquement adaptés pour la réception de contenu ou l'interaction avec le contenu, p.ex. boîtier décodeur [STB]; Leurs opérations*

AL N ***21/41*** · · *Structure de client; structure de périphérique de client*

AL N ***21/414*** · · · *Plate-formes spécialisées de client, p.ex. récepteur au sein d'une voiture, intégré dans un appareil mobile*

AL N *21/4143* · · · · ***Ordinateur personnel [PC]***

AL N *21/4147* · · · · ***Enregistreur vidéo personnel [PVR] (H04N 5/76 a priorité)***

AL N ***21/418*** · · · *Carte externe destinée à être utilisée en combinaison avec le dispositif client, p.ex. pour l'accès conditionnel*

AL N *21/4185* · · · · ***pour le paiement (mécanismes actionnés par carte d'identité codée ou carte de crédit codée pour déclencher ou actionner des appareils de vente, de location, de distribution de pièces de monnaie ou de papier-monnaie, ou de remboursement G07F 7/08; schémas, architectures ou protocoles de paiement G06Q 20/00; commerce électronique G06Q 30/00)***

AL N *21/422* · · · ***Périphériques d'entrée uniquement, p.ex. système de positionnement global [GPS] (Dispositions d'entrée ou dispositions d'entrée et de sortie combinées pour l'interaction entre l'utilisateur et le calculateur G06F 3/01)***

AL N *21/4223* · · · · ***Caméras (H04N 5/225 a priorité)***

AL N ***21/4227*** · · · · *Entrée à distance par un utilisateur situé à distance du dispositif client, p.ex. au travail*

AL N *21/426* · · · ***Eléments internes de client (H04N 5/44 a priorité)***

AL N 21/43 · · *Traitement de contenu ou données additionnelles, p.ex. démultiplexage de données additionnelles d'un flux vidéo numérique; Opérations élémentaires de client, p.ex surveillance du réseau domestique, synchronisation de l'horloge du décodeur; Intergiciel de client*

AL N 21/431 · · · *Génération d'interfaces visuelles; Rendu de contenu ou données additionnelles (circuits de réception pour visualisation d'information additionnelle H04N5/445)*

AL N 21/432 · · · *Opération de récupération de contenu d'un support de stockage local, p.ex. disque dur*

AL N 21/433 · · · *Opération de stockage de contenu, p.ex. opération de stockage en réponse à une requête de pause, opérations de cache*

AL N 21/4335 · · · · *Opérations de gestion interne, e.g. priorisation de contenu pour l'effacement dû à des restrictions d'espace de stockage*

AL N 21/434 · · · *Désassemblage d'un flux multiplexé, p.ex. démultiplexage de flux audio et vidéo, extraction de données additionnelles d'un flux vidéo; remultiplexage de flux multiplexés; Extraction ou traitement de SI; Désassemblage d'un flux élémentaire paquetisé*

AL N 21/435 · · · *Traitement de données additionnelles, p.ex. décryptage de données additionnelles, reconstruction de logiciel à partir de modules extraits du flux de transport*

AL N 21/436 · · · *Interfaçage d'un réseau de distribution local, p.ex. communication avec un autre STB, à l'intérieur de la maison*

AL N 21/4363 . . . . *Adaptation du flux vidéo à un réseau local spécifique, p.ex. un réseau IEEE 1394 ou Bluetooth*

AL N 21/4367 . . . . *Etablissement d'une communication protégée entre le client et un dispositif périphérique ou carte à puces (Dispositions pour les communications secrètes ou protégées H04L 9/00; Dispositions de sécurité pour protéger les calculateurs ou les systèmes de calculateurs contre une activité non autorisée G06F 21/00)*

AL N 21/437 . . . *Interfaçage de la voie montante du réseau de transmission, p.ex. pour transmettre des requêtes de client à un serveur VOD*

AL N 21/438 . . . *Interfaçage de la voie descendante du réseau de transmission provenant d'un serveur, p.ex. récupération de paquets MPEG d'un réseau IP*

AL N 21/4385 . . . . *Traitement de flux multiplexé, p.ex. décryptage de flux multiplexé*

AL N 21/439 . . . *Traitement de flux audio élémentaires*

AL N 21/44 . . . *Traitement de flux élémentaires vidéo, p.ex. raccordement d'un clip vidéo récupéré d'un stockage local avec un flux vidéo en entrée, rendu de scènes selon des graphes de scène MPEG-4*

AL N 21/4402 . . . . *impliquant des opérations de reformatage de signaux vidéo pour la redistribution domestique, le stockage ou l'affichage en temps réel*

AL N 21/4405 . . . . *impliquant le décryptage de flux vidéo (dispositions pour les communications secrètes ou protégées H04L 9/00)*

AL N 21/4408 · · · · *impliquant le cryptage de flux vidéo, p.ex. re-cryptage d'un flux vidéo décrypté pour la redistribution dans un réseau domestique (dispositions pour les communications secrètes ou protégées H04L 9/00)*

AL N 21/441 · · · *Acquisition de l'identification d'un utilisateur final (authentification dans les réseaux de communication sans fil H04W 12/06)*

AL N 21/4415 · · · · ***utilisant les caractéristiques biométriques de l'utilisateur, p.ex. par reconnaissance de la voix ou balayage d'empreinte digitale (Méthodes ou dispositions pour la reconnaissance de formes G06K 9/00)***

AL N 21/442 · · · *Surveillance de procédés ou de ressources, p.ex. détection de la défaillance d'un dispositif d'enregistrement, surveillance de la bande passante sur la voie descendante, du nombre de visualisations d'un film, de l'espace de stockage disponible dans le disque dur interne*

AL N 21/4425 · · · · *Surveillance d'erreurs de traitement au client ou de défaillance matérielle (surveillance dans le traitement électrique de données numériques G06F 11/00)*

AL N 21/443 · · · *Procédés de système d'exploitation, p.ex. démarrage d'un STB, implémentation d'une machine virtuelle Java dans un STB, gestion d'énergie dans un STB (dispositions pour le chargement ou le lancement de programme G06F 9/445)*

AL N 21/45 · · *Opérations de gestion réalisées par le client pour faciliter la réception de contenu ou l'interaction avec le contenu ou administration des données liées à l'utilisateur final ou au dispositif client lui-même, p.ex. apprentissage des préférences d'utilisateurs pour recommender des films, résolution de conflits d'ordonnancement*

AL N 21/454 · · · *Filtrage de contenu, p.ex. blocage des publicités*

AL N 21/4545 · · · · *Signaux d'entrée aux algorithmes de filtrage, p.ex. filtrage d'une région de l'image*

AL N 21/458 · · · *Ordonnancement de contenu pour créer un flux personnalisé, p.ex. en combinant une publicité stockée localement avec un flux en entrée; Opérations de mise à jour, p.ex. pour modules de système d'exploitation*

AL N 21/462 · · · *Gestion de contenu ou données additionnelles, p.ex. création d'un guide de programmes maître à partir de données reçues par internet et d'une tête de réseau, contrôle de la complexité d'un flux vidéo en mettant à l'échelle la résolution ou le débit en fonction des capacités du client*

AL N 21/4623 · · · · *Traitement de messages de titres d'accès, p.ex. message de contrôle d'accès [ECM], message de gestion d'accès [EMM]*

AL N *21/4627* · · · · ***Gestion de droits***

AL N 21/466 · · · *Procédé d'apprentissage pour la gestion intelligente, p.ex. apprentissage des préférences d'utilisateurs pour recommender des films*

AL N *21/47* · · ***Applications pour utilisateurs finaux (Techniques d'interaction pour les interfaces utilisateur graphiques G06F 3/048; circuits de réception pour visualisation d'information additionnelle H04N 5/445)***

AL N 21/472 · · · *Interface pour utilisateurs finaux pour la requête de contenu, de données additionnelles ou de services; Interface pour utilisateurs finaux pour l'interaction avec le contenu, p.ex. pour la réservation de contenu ou la définition de rappels, pour la requête de notification d'évènement, pour la manipulation de contenu*

AL N 21/4722 · · · · *pour la requête de données additionnelles associées au contenu*

AL N ***21/4725*** · · · · · *utilisant des régions interactives de l'image, p.ex. zones actives ('hot spots')*

AL N ***21/4728*** · · · · *pour la sélection d'une région d'intérêt [ROI], p.ex. pour la requête d'une version de plus haute résolution de la région sélectionnée*

AL N ***21/475*** · · · *Interface pour utilisateurs finaux pour saisir des données d'utilisateurs finaux, p.ex. numéro d'identification personnel [PIN], données de préférences*

AL N ***21/478*** · · · *Services additionnels, p.ex. affichage de l'identification d'un appelant téléphonique, application d'achat*

AL N ***21/4782*** · · · · ***Navigation sur le Web***

AL N ***21/4784*** · · · · ***réception de récompenses (schémas, architectures ou protocoles de paiement G06Q 20/00; commerce électronique G06Q 30/00)***

AL N ***21/4786*** · · · · ***e-mail***

AL N ***21/4788*** · · · · ***communication avec d'autres utilisateurs, p.ex. discussion en ligne***

AL N ***21/482*** · · · *Interface pour utilisateurs finaux pour la sélection de programmes*

AL N ***21/485*** · · · ***Interface pour utilisateurs finaux pour la configuration du client***

AL N ***21/488*** · · · ***Services de données, p.ex. téléscripteur d'actualités***

AL N *21/60 · Structure du réseau ou procédés pour la distribution de vidéo entre le serveur et le client ou entre des clients distants (réseaux de données à commutation H04L 12/00; réseaux de télécommunications sans fil H04W) ; Signalisation de contrôle entre clients, serveur et éléments du réseau; Transmission de données de gestion entre serveur et client; Détails de la communication entre serveur et client*

AL N *21/61 · · Structure physique de réseau; Traitement de signal (H04B a priorité)*

AL N *21/63 · · Signalisation de contrôle entre des éléments du client, serveur et réseau; Procédés liés au réseau pour la distribution de vidéo entre serveur et clients, p.ex. transmission de la couche de base et des couches d'amélioration sur des voies de transmission différentes, mise en œuvre d'une communication pair à pair via internet entre des récepteurs décodeurs; Protocoles de communication; Adressage*

AL N *21/633 · · · Signaux de commande issus du serveur dirigés vers des éléments du réseau ou du client*

AL N *21/6332 · · · · vers le client*

AL N *21/6334 · · · · · pour l'autorisation, p.ex. en transmettant une clé (dispositions pour les communications secrètes ou protégées H04L 9/00)*

AL N *21/6336 · · · · · vers le décodeur*

AL N *21/6338 · · · · vers le réseau*

AL N *21/637 · · · Signaux de commande émis par le client et dirigés vers les éléments du serveur ou du réseau*

AL N *21/6371 · · · · vers le réseau*

AL N *21/6373 · · · · pour le contrôle du débit*

AL N *21/6375 · · · · pour demander une retransmission*

AL N ***21/6377*** · · · · ***vers le serveur***

AL N ***21/6379*** · · · · · ***vers le codeur***

AL N ***21/64*** · · · ***Adressage***

AL N ***21/6402*** · · · · ***Allocation d'adresses pour des clients***

AL N ***21/6405*** · · · · ***Multidiffusion***

AL N ***21/6408*** · · · · ***Monodiffusion***

AL N ***21/643*** · · · ***Protocoles de communication***

AL N ***21/6433*** · · · · ***Digital Storage Media - Command and Control Protocol [DSM-CC]***

AL N ***21/6437*** · · · · ***Protocole de transport en temps réel [RTP]***

AL N ***21/647*** · · · ***Signalisation de contrôle entre des éléments du réseau et serveur ou clients, p.ex. contrôle de la qualité du flux vidéo en éliminant des paquets, protection du contenu contre une modification non autorisée dans le réseau, surveillance de la charge du réseau, réalisation d'une passerelle entre deux réseaux différents, p.ex. entre réseau IP et réseau sans fil***

AL N ***21/65*** · · ***Transmission de données de gestion entre le client et le serveur***

AL N ***21/654*** · · · ***Transmission du serveur vers le client***

AL N ***21/6543*** · · · · ***pour forcer certaines opérations au client, p.ex. l´enregistrement***

AL N ***21/6547*** **· · · ·** ***comprenant des paramètres, p.ex. pour l'initialisation du client***

AL N ***21/658*** **· · ·** ***Transmission du client vers le serveur***

AL N ***21/6583*** **· · · ·** ***Accusation de réception***

AL N ***21/6587*** **· · · ·** ***Paramètres de contrôle, p.ex. commande de lecture à vitesse variable (´trick play´), sélection d'un point de vue***

AL N ***21/80*** **·** ***Génération ou traitement de contenu ou de données additionnelles par un créateur de contenu, indépendamment du processus de distribution; Contenu per se***

AL N ***21/81*** **· ·** ***Composants mono média du contenu***

AL N ***21/83*** **· ·** ***Génération ou traitement de données de protection ou de description associées au contenu ; Structuration du contenu***

AL N ***21/835*** **· · ·** ***Génération de données de protection, p.ex. certificats***

AL N ***21/8352*** **· · · ·** ***impliquant des donnés d'identification du contenu ou de la source, p. ex. ´Unique Material Identifier´ [UMID]***

AL N ***21/8355*** **· · · ·** ***impliquant des données sur l'utilisation, p.ex. nombre de copies ou de visualisations autorisées***

AL N ***21/8358*** **· · · ·** ***impliquant des filigranes numériques***

AL N ***21/84*** **· · ·** ***Génération ou traitement de données de description, p. ex. descripteurs de contenu***

AL N ***21/8405*** **· · · ·** ***Représentés par des mots clés***

AL N ***21/845*** **· · ·** ***Structuration du contenu, p. ex. décomposition du contenu en segments temporels***

AL N ***21/85*** **· ·** ***Assemblage du contenu, génération d'applications multimédia***

AL N ***21/854*** **· · ·** ***Création de contenu***

AL N ***21/8541*** **· · · ·** ***Impliquant des embranchements, p. ex. vers des fins d'histoire différentes***

AL N ***21/8543*** **· · · ·** ***Utilisant un langage de description, p. ex. ´Multimedia and Hypermedia information coding Expert Group´ [MHEG], ´eXtensible Markup Language´ [XML]***

AL N ***21/8545*** **· · · ·** ***pour générer des applications interactives***

AL N ***21/8547*** **· · · ·** ***Impliquant des marquages temporels pour synchroniser le contenu***

AL N ***21/8549*** **· · · ·** ***Création de résumés vidéo p. ex. bande annonce***

AL N ***21/858*** **· · ·** ***Création de liens entre données et contenu, p. ex. en liant un URL à un objet vidéo en créant une zone active ('hotspot')***

EXCERPT FROM DOCUMENT IPC/WG/21/2
EXTRAIT DU DOCUMENT IPC/WG/21/2

REPORT ON THE SEVENTH SESSION OF THE IPC ADVANCED LEVEL SUBCOMMITTEE

17. Since the seventh session of the ALS was the final one, all pending A projects were included in the program of the Working Group. From now on, A projects will designate revision projects originating from the IP5 Offices and C projects will designate revision projects that would be included in the IPC revision program by the Committee. For practical reasons, the schemes adopted by the ALS in the framework of projects A 012, A 013, A 014, A 017, A 018 and A 020 were included in the Technical Annexes of this session (see Technical Annexes 1 to 7 and 9 to this report).

IPC REVISION PROGRAM

General

25. The Working Group noted the decision by the Committee of Experts at its forty-first session that revision projects, including advanced level revision projects, would be considered by the Working Group and forwarded to the Committee for final adoption after completion. It was noted that projects originating from the Trilateral or the IP5 Offices cooperation will be designated by the letter “A” and revision projects included in the IPC revision program by the Committee will be designated by the letter “C” (see paragraph 17, above).

26. Discussions were based on compilations of the relevant revision project files. The Working Group considered nine pending C projects, plus 17 A projects forwarded from the former ALS, and approved amendments relating to those projects (see Technical Annexes 1 to 29 to this report relating to revision projects). The status of those projects and the list of future actions and deadlines are indicated in Annex III to this report.

IPC Revision Projects

27. The Working Group made the following observations with respect to the IPC revision projects. All references to annexes in this paragraph refer to annexes of the corresponding project file, unless otherwise stated.

Project A 014 (electrical) – The Working Group approved, with some minor amendments, the English version of Annex 15 (see Technical Annex 5E to this report).

Comments were invited on the French version of Annex 19. The RCL of Annex 16 was approved, including Japan’s remarks of Annex 18, and the CRL of Annex 17 was also approved with some modifications (see Technical Annexes 3E to 4E and 3F to 4F to this report).

The Working Group noted a rapporteur proposal for the removal of non-limiting references in the subclass H04N that appears as Annex 8 to project file C 454. It was decided to carry out future discussions for subclass H04N in the framework of project A 014. The International Bureau was requested to transfer the relevant annexes from project C 454 to A 014.

A round of comments was invited on said Annex 8, to be followed by a consolidated rapporteur proposal.

RAPPORT SUR LA SEPTIÈME SESSION DU SOUS-COMITÉ CHARGÉ DU NIVEAU ÉLEVÉ DE LA CIB

17. Étant donné que la septième session de l'ALS était la dernière, tous les projets A en instance ont été inscrits au programme du groupe du travail. Dorénavant, les projets A désigneront les projets de révision émanant des offices de l'IP5 et les projets C désigneront les projets de révision qui seront inscrits au programme de révision de la CIB par le comité. Pour des raisons pratiques, les schémas adoptés par l'ALS dans le cadre des projets A 012, A 013, A 014, A 017, A 018 et A 020 ont été inclus dans les annexes techniques du rapport sur la session en cours (voir les annexes techniques 1 à 7 et 9 du présent rapport).

PROGRAMME DE RÉVISION DE LA CIB

Généralités

25. Le groupe de travail a pris note de la décision prise par le comité d'experts à sa quarante et unième session selon laquelle les projets de révision, y compris ceux relatifs au niveau élevé, seront examinés par le groupe de travail et transmis au comité pour adoption définitive une fois achevés. Il a été pris note du fait que les projets émanant des offices de la coopération trilatérale ou de l'IP5 seraient désignés par la lettre "A" et que les projets de révision inscrits au programme de révision de la CIB par le comité seraient désignés par la lettre "C" (voir le paragraphe 17).

26. Les délibérations ont eu lieu sur la base de synthèses des dossiers de projet correspondants. Le groupe de travail a examiné neuf projets C en instance ainsi que 17 projets A transmis par l'ancien ALS et a approuvé les modifications relatives à ces projets (voir les annexes techniques 1 à 29 du présent rapport relatives aux projets de révision). L'état d'avancement de ces projets et la liste des mesures à prendre et des délais correspondants font l'objet de l'annexe III du présent rapport.

Projets de révision de la CIB

27. Le groupe de travail a formulé les observations ci-après concernant les projets de révision de la CIB. Dans le présent paragraphe, tout renvoi à des annexes désigne, sauf indication contraire, les annexes du dossier de projet correspondant.

Projet A 014 (électricité) – Le groupe de travail a approuvé, sous réserve de modifications mineures, la version anglaise figurant à l'annexe 15 (voir l'annexe technique 5E du présent rapport).

Des observations ont été demandées sur la version française figurant à l'annexe 19. La table de concordance figurant à l'annexe 16 a été approuvée, avec les observations du Japon indiquées à l'annexe 18, et la table des renvois croisés figurant à l'annexe 17 a également été approuvée sous réserve de certaines modifications (voir les annexes techniques 3E et 4E et 3F et 4F du présent rapport).

Le groupe de travail a pris note d'une proposition du rapporteur concernant la suppression des renvois non limitatifs dans la sous-classe H04N, faisant l'objet de l'annexe 8 du dossier de projet C 454. Il a été décidé de mener les discussions futures concernant la sous-classe H04N dans le cadre du projet A 014. Le Bureau international a été prié de transférer les annexes correspondantes du projet C 454 dans le projet A 014.

Une série d'observations a été demandée sur l'annexe 8, en vue de l'établissement d'une proposition de synthèse du rapporteur.

ANNEX 3E G07F [Project-Rapporteur : A014/EP <WG21>]

AL M 17/28 · for radio apparatus

ANNEXE 3F G07F **[Projet-Rapporteur : A014/EP] <WG21> [Tr.: IB]**

AL M 17/28 · pour appareils radios

ANNEX 4E H04K **[Project-Rapporteur : A014/EP <WG21>]**

CL M **1/00** **Secret communication** (ciphering or deciphering apparatus per se **G09C**; systems with reduced bandwidth or suppressed carrier **H04B 1/66**; spread spectrum techniques in general **H04B 1/69**; by using a sub-carrier **H04B 14/08**; by multiplexing **H04J**; transmission systems for secret digital information **H04L 9/00**; secret or subscription television systems **H04N 7/16**, **H04N 21/00**)

ANNEXE 4F H04K **[Projet-Rapporteur : A014/EP] <WG21> [Tr.: IB]**

CL M **1/00** **Communications secrètes** (appareils à chiffrer ou à déchiffrer en soi **G09C**; systèmes à largeur de bande réduite ou porteuse supprimée **H04B 1/66**; techniques d'étalement de spectre, en général **H04B 1/69**; en utilisant une sous-porteuse **H04B 14/08**; par multiplex **H04J**; systèmes de transmission d'information numérique secrète **H04L 9/00**; systèmes de télévision secrets ou à abonnement **H04N 7/16**, **H04N 21/00**)

ANNEX 5E H04N **[Project-Rapporteur : A014/EP <WG21>]**

CL C ***5/00*** ***Details of television systems*** *(scanning details or combination thereof with generation of supply voltages **H04N 3/00**; specially adapted for colour television **H04N 9/00**; servers specially adapted for the distribution of content **H04N 21/20**; client devices specially adapted for the reception of or interaction with content **H04N 21/40**)*

CL C ***7/00*** ***Television systems*** *(details **H04N 3/00**, **H04N 5/00**, specially adapted for colour television **H04N 11/00**; stereoscopic television systems **H04N 13/00**; selective content distribution **H04N 21/00**)*

CL C *7/16* · *Analogue secrecy systems; Analogue subscription systems*

CL C *7/24* · *Systems for the transmission of television signals using pulse code modulation (**H04N 21/00** takes precedence)*

CL C *7/52* · · *Systems for transmission of a pulse code modulated with one or more other pulse code modulated signals, e.g. an audio signal or a synchronizing signal (assembling of a multiplex stream by combining a video stream with other content or additional data, remultiplexing of multiplex streams, insertion of stuffing bits into the multiplex stream, assembling of a packetised elementary stream at server side **H04N 21/236**; disassembling of a multiplex stream, remultiplexing of multiplex streams, extraction or processing of Service Information, disassembling of packetised elementary stream at client side **H04N 21/434**)*

AL D 7/58 (transferred to **H04N 21/2365**,**H04N 21/434**)

AL D 7/60 (transferred to **H04N 21/236**,**H04N 21/434**)

AL D 7/62 (transferred to **H04N 21/242**,**H04N 21/431**,**H04N 21/434**,**H04N 21/8547**)

CL N ***21/00*** ***Selective content distribution, e.g. interactive television, VOD [Video On Demand]*** *(broadcast communication **H04H**; arrangements, apparatus, circuits or systems for communication control or processing being characterised by a protocol **H04L 29/06**; real-time bi-directional transmission of motion video data **H04N 7/14**)*

1. CL N *Note*
21/00 This group covers :

- *interactive video distribution processes, systems, or elements thereof, which are characterised by point-to-multipoint system configurations, and which are mainly used for motion video data unidirectional distribution or delivery resulting from interactions between systems operators, e.g. access or service providers, or users e.g. subscribers, and system elements.* **[new.]**
- *such systems include dedicated communication systems, such as television distribution systems, which primarily distribute or deliver motion video data in the manner indicated, which may, in addition, provide a framework for further, diverse data communications or services in either unidirectional or bi-directional form. However, video will occupy most of the downlink bandwidth in the distribution process.* **[new.]**
- *typically, system operators interface with transmitter-side elements or users' interface with receiver-side elements in order to facilitate, through interaction with such elements, the dynamic control of data processing or data flow at various points in the system. This interaction is typically occasional or intermittent in nature.* **[new.]**

- *processes, systems or elements thereof specially adapted to the generation, distribution and processing of data, which is either associated with video content, e.g. metadata, ratings, or related to the user or his environment and which has been actively or passively gathered. This data is either used to facilitate interaction or to alter or target the content.* **[new.]**

2. *2. In this main group, at each hierarchical level, in the absence of an indication to the contrary, classification is made in the first appropriate place.* **[new.]**

AL N *21/20* · *Servers specifically adapted for the distribution of content, e.g. VOD servers; Operations thereof*

AL N *21/21* · · *Server components or server architectures*

AL N *21/214* · · · *Specialised server platform, e.g. server located in an airplane, hotel or hospital*

AL N *21/218* · · · *Source of audio or video content, e.g. local disk arrays*

AL N *21/2183* · · · · *Cache memory*

AL N *21/2187* · · · · *Live feed*

AL N *21/222* · · · *Secondary servers, e.g. proxy server or cable television Head-end*

AL N *21/2225* · · · · *Local VOD servers*

AL N *21/226* · · · *Internal components of the server*

AL N *21/23* · · *Processing of content or additional data; Elementary server operations; Server middleware*

AL N *21/231* · · · *Content storage operation, e.g. caching movies for short term storage, replicating data over plural servers or prioritizing data for deletion*

AL N *21/2312* · · · · *Data placement on disk arrays*

AL N *21/2315* · · · · · *using interleaving*

AL N *21/2318* · · · · · *using striping*

AL N *21/232* · · · *Content retrieval operation within server, e.g. reading video streams from disk arrays*

AL N *21/233* · · · *Processing of audio elementary streams*

AL N *21/234* · · · *Processing of video elementary streams, e.g. splicing of video streams or manipulating MPEG-4 scene graphs* (video encoding or transcoding processes <u>per se</u> ***H04N 7/26***)

AL N *21/2343* · · · · *involving reformatting operations of video signals for distribution or compliance with end-user requests or end-user device requirements*

AL N *21/2347* · · · · *involving video stream encryption* (arrangements for secret or secure communication ***H04L 9/00***; analogue secrecy systems ***H04N 7/16***)

AL N *21/235* · · · *Processing of additional data, e.g. scrambling of additional data or processing content descriptors*

AL N *21/236* · · · *Assembling of a multiplex stream, e.g. transport stream, by combining a video stream with other content or additional data, e.g. inserting a URL [Uniform Resource Locator] into a video stream, multiplexing software data into a video stream; Remultiplexing of multiplex streams; Insertion of stuffing bits into the multiplex stream, e.g. to obtain a constant bit-rate; Assembling of a packetised elementary stream*

AL N *21/2362* · · · · *Generation or processing of SI [Service Information]*

AL N *21/2365* · · · · *Multiplexing of several video streams*

AL N *21/2368* · · · · *Multiplexing of audio and video streams*

AL N *21/237* · · · *Communication with additional data server*

AL N *21/238* · · · *Interfacing the downstream path of the transmission network, e.g. adapting the transmission rate of a video stream to network bandwidth; Processing of multiplex streams*

AL N *21/2381* · · · · *Adapting the multiplex stream to a specific network, e.g. an IP [Internet Protocol] network*

AL N *21/2383* · · · · *Channel coding of digital bit-stream, e.g. modulation*

AL N *21/2385* · · · · *Channel allocation (**H04N 21/266** takes precedence) ; Bandwidth allocation (**H04N 21/24** takes precedence)*

AL N *21/2387* · · · · *Stream processing in response to a playback request from an end-user, e.g. for trick-play*

AL N *21/2389* · · · · *Multiplex stream processing, e.g. multiplex stream encrypting*

AL N *21/239* · · · *Interfacing the upstream path of the transmission network, e.g. prioritizing client requests*

AL N *21/24* · · · *Monitoring of processes or resources, e.g. monitoring of server load, available bandwidth or upstream requests*

AL N *21/241* · · · *OS [Operating System] processes, e.g. server setup (arrangements for programme control* ***G06F 9/00****)*

AL N *21/242* · · · *Synchronization processes, e.g. processing of PCR [Program Clock References]*

AL N *21/25* · · *Management operations performed by the server for facilitating the content distribution or administrating data related to end-users or client devices, e.g. end-user or client device authentication or learning user preferences for recommending movies*

AL N *21/254* · · · *Management at additional data server, e.g. shopping server or rights management server*

AL N *21/2543* · · · · *Billing*

AL N *21/2547* · · · · · *Third party billing, e.g. billing of advertiser*

AL N *21/258* · · · *Client or end-user data management, e.g. managing client capabilities, user preferences or demographics or processing of multiple end-users preferences to derive collaborative data*

AL N *21/262* · · · *Content or additional data distribution scheduling, e.g. sending additional data at off-peak times, updating software modules, calculating the carousel transmission frequency, delaying a video stream transmission or generating play-lists*

AL N *21/266* · · · *Channel or content management, e.g. generation and management of keys and entitlement messages in a conditional access system or merging a VOD unicast channel into a multicast channel*

AL N *21/2662* · · · · *Controlling the complexity of the video stream, e.g. by scaling the resolution or bitrate of the video stream based on the client capabilities*

AL N *21/2665* · · · · *Gathering content from different sources, e.g. Internet and satellite*

AL N *21/2668* · · · · *Creating a channel for a dedicated end-user group, e.g. by inserting targeted commercials into a video stream based on end-user profiles*

AL N *21/27* · · *Server based end-user applications*

AL N *21/274* · · · *Storing end-user specific content or additional data in response to end-user request*

AL N *21/2743* · · · · *Video hosting of uploaded data from client*

AL N *21/2747* · · · · *Remote storage of video programs received via the downstream path, e.g. from the server*

AL N *21/278* · · · *Content descriptor database or directory service for end-user access*

AL N *21/40* · *Client devices specifically adapted for the reception of, or interaction with, content, e.g. STB [set-top-box]; Operations thereof*

AL N *21/41* · · *Structure of client; Structure of client peripherals*

AL N *21/414* · · · *Specialised client platforms, e.g. receiver in car or embedded in a mobile appliance*

AL N *21/4143* · · · · *PC [Personal Computer]*

AL N *21/4147* · · · · *PVR [Personal Video Recorder] (**H04N 5/76** takes precedence)*

AL N *21/418* · · · *External card to be used in combination with the client device, e.g. for conditional access*

AL N *21/4185* · · · · *for payment*

AL N *21/422* · · · *Input-only peripherals, e.g. GPS [Global Positioning System] (input arrangements or combined input and output arrangements for interaction between user and computer **G06F 3/01**)*

AL N *21/4223* · · · · *Cameras (**H04N 5/225** takes precedence)*

AL N *21/4227* · · · · *Remote input by a user located remotely from the client device, e.g. at work*

AL N *21/426* · · · *Internal components of the client (**H04N 5/44** takes precedence)*

AL N *21/43* · · *Processing of content or additional data, e.g. demultiplexing additional data from a digital video stream; Elementary client operations, e.g. monitoring of home network or synchronizing decoder's clock; Client middleware*

AL N *21/431* · · · *Generation of visual interfaces; Content or additional data rendering (receiver circuitry for displaying additional information **H04N 5/445**)*

AL N *21/432* · · · *Content retrieval operation from a local storage medium, e.g. hard-disk*

AL N *21/433* · · · *Content storage operation, e.g. storage operation in response to a pause request or caching operations*

AL N *21/4335* · · · · *Housekeeping operations, e.g. prioritizing content for deletion because of storage space restrictions*

AL N *21/434* · · · *Disassembling of a multiplex stream, e.g. demultiplexing audio and video streams or extraction of additional data from a video stream; Remultiplexing of multiplex streams; Extraction or processing of SI; Disassembling of packetised elementary stream*

AL N *21/435* · · · *Processing of additional data, e.g. decrypting of additional data or reconstructing software from modules extracted from the transport stream*

AL N *21/436* · · · *Interfacing a local distribution network, e.g. communicating with another STB or inside the home*

AL N *21/4363* · · · · *Adapting the video stream to a specific local network, e.g. a IEEE 1394 or Bluetooth network*

AL N *21/4367* · · · · *Establishing a secure communication between the client and a peripheral device or smart card* (arrangements for secret or secure communication ***H04L 9/00***; security arrangements for protecting computers or computer systems against unauthorised activity ***G06F 21/00***)

AL N *21/437* · · · *Interfacing the upstream path of the transmission network, e.g. for transmitting client requests to a VOD server*

AL N *21/438* · · · *Interfacing the downstream path of the transmission network originating from a server, e.g. retrieving MPEG packets from an IP network*

AL N *21/4385* · · · · *Multiplex stream processing, e.g. multiplex stream decrypting*

AL N *21/439* · · · *Processing of audio elementary streams*

AL N *21/44* · · · *Processing of video elementary streams, e.g. splicing a video clip retrieved from local storage with an incoming video stream or rendering scenes according to MPEG-4 scene graphs*

AL N *21/4402* · · · · *involving reformatting operations of video signals for household redistribution, storage or real-time display*

AL N *21/4405* · · · · *involving video stream decryption* (arrangements for secret or secure communication ***H04L 9/00***)

AL N *21/4408* · · · · *involving video stream encryption, e.g. re-encrypting a decrypted video stream for redistribution in a home network* (arrangements for secret or secure communication ***H04L 9/00***)

AL N *21/441* · · · *Acquiring end-user identification*

AL N *21/4415* · · · · *using biometric characteristics of the user, e.g. by voice recognition or fingerprint scanning*

AL N *21/442* · · · *Monitoring of processes or resources, e.g. detecting the failure of a recording device, monitoring the downstream bandwidth, the number of times a movie has been viewed or the storage space available from the internal hard disk*

AL N *21/4425* · · · · *Monitoring of client processing errors or hardware failure* (monitoring in electrical digital data processing ***G06F 11/00***)

AL N *21/443* · · · *OS processes, e.g. booting a STB, implementing a Java virtual machine in a STB or power management in a STB* (arrangements for program loading or initiating ***G06F 9/445***)

AL N *21/45* · · *Management operations performed by the client for facilitating the reception of or the interaction with the content or administrating data related to the end-user or to the client device itself, e.g. learning user preferences for recommending movies or resolving scheduling conflicts*

AL N *21/454* · · · *Content filtering, e.g. blocking advertisements*

AL N *21/4545* · · · · *Input to filtering algorithms, e.g. filtering a region of the image*

AL N *21/458* · · · *Scheduling content for creating a personalised stream, e.g. by combining a locally stored advertisement with an incoming stream; Updating operations, e.g. for OS modules*

AL N *21/462* · · · *Content or additional data management e.g. creating a master electronic program guide from data received from the Internet and a Head-end or controlling the complexity of a video stream by scaling the resolution or bit-rate based on the client capabilities*

AL N *21/4623* · · · · *Processing of entitlement messages, e.g. ECM [Entitlement Control Message] or EMM [Entitlement Management Message]*

AL N *21/4627* · · · · *Rights management*

AL N *21/466* · · · *Learning process for intelligent management, e.g. learning user preferences for recommending movies*

AL N *21/47* · · *End-user applications* (interaction techniques for graphical user interfaces ***G06F 3/048***; receiver circuitry for displaying additional information ***H04N 5/445***)

AL N *21/472* · · · *End-user interface for requesting content, additional data or services; End-user interface for interacting with content, e.g. for content reservation or settting reminders, for requesting event notification or for manipulating displayed content*

AL N *21/4722* · · · · *for requesting additional data associated with the content*

AL N *21/4725* · · · · · *using interactive regions of the image, e.g. hot spots*

AL N *21/4728* · · · · *for selecting a ROI [Region Of Interest], e.g. for requesting a higher resolution version of a selected region*

AL N *21/475* · · · *End-user interface for inputting end-user data, e.g. PIN [Personal Identification Number] or preference data*

AL N *21/478* · · · *Supplemental services, e.g. displaying phone caller identification or shopping application*

AL N *21/4782* · · · · *Web browsing*

AL N *21/4784* · · · · *receiving rewards*

AL N *21/4786* · · · · *e-mailing*

AL N *21/4788* · · · · *communicating with other users, e.g. chatting*

AL N *21/482* · · · *End-user interface for program selection*

AL N *21/485* · · · *End-user interface for client configuration*

AL N *21/488* · · · *Data services, e.g. news ticker*

AL N *21/60* · *Network structure or processes for video distribution between server and client or between remote clients (data switching networks **H04L 12/00**; wireless communication networks **H04W**) ; Control signaling between clients, server and network components; Transmission of management data between server and client; Communication details between server and client*

AL N *21/61* · · *Network physical structure; Signal processing (**H04B** takes precedence)*

AL N *21/63* · · *Control signaling between client, server and network components; Network processes for video distribution between server and clients, e.g. transmitting basic layer and enhancement layers over different transmission paths, setting up a peer-to-peer communication via Internet between remote STB's; Communication protocols; Addressing*

AL N *21/633* · · · *Control signals issued by server directed to the network components or client*

AL N *21/6332* · · · · *directed to client*

AL N *21/6334* · · · · · *for authorization, e.g. by transmitting a key (arrangements for secret or secure communication **H04L 9/00**)*

AL N *21/6336* · · · · · *directed to decoder*

AL N *21/6338* · · · · *directed to network*

AL N *21/637* · · · *Control signals issued by the client directed to the server or network components*

AL N *21/6371* · · · · *directed to network*

AL N *21/6373* · · · · *for rate control*

AL N *21/6375* · · · · *for requesting retransmission*

AL N *21/6377* · · · · *directed to server*

AL N *21/6379* · · · · · *directed to encoder*

AL N *21/64* · · · *Addressing*

AL N *21/6402* · · · · *Address allocation for clients*

AL N *21/6405* · · · · *Multicasting*

AL N *21/6408* · · · · *Unicasting*

AL N *21/643* · · · *Communication protocols*

AL N *21/6433* · · · · *DSM-CC [Digital Storage Media - Command and Control Protocol]*

AL N *21/6437* · · · · *RTP [Real-time Transport Protocol]*

AL N *21/647* · · · *Control signaling between network components and server or clients; Network processes for video distribution between server and clients, e.g. controlling the quality of the video stream, by dropping packets, protecting content from unauthorised alteration within the network, monitoring of network load or bridging between two different networks, e.g. between IP and wireless*

AL N *21/65* · · *Transmission of management data between client and server*

AL N *21/654* · · · *Transmission by server directed to the client*

AL N *21/6543* · · · · *for forcing some client operations, e.g. recording*

AL N *21/6547* · · · · *comprising parameters, e.g. for client setup*

AL N *21/658* · · · *Transmission by the client directed to the server*

AL N *21/6583* · · · · *Acknowledgement*

AL N *21/6587* · · · · *Control parameters, e.g. trick play commands or viewpoint selection*

AL N *21/80* · *Generation or processing of content or additional data by content creator independently of the distribution process; Content* *per se*

AL N *21/81* · · *Monomedia components thereof*

AL N *21/83* · · *Generation or processing of protective or descriptive data associated with content; Content structuring*

AL N *21/835* · · · *Generation of protective data, e.g. certificates*

AL N *21/8352* · · · · *involving content or source identification data, e.g. UMID [Unique Material Identifier]*

AL N *21/8355* · · · · *involving usage data, e.g. number of copies or viewings allowed*

AL N *21/8358* · · · · *involving watermark*

AL N *21/84* · · · *Generation or processing of descriptive data, e.g. content descriptors*

AL N *21/8405* · · · · *represented by keywords*

AL N *21/845* · · · *Structuring of content, e.g. decomposing content into time segments*

AL N *21/85* · · *Assembly of content; Generation of multimedia applications*

AL N *21/854* · · · *Content authoring*

AL N *21/8541* · · · · *involving branching, e.g. to different story endings*

AL N *21/8543* · · · · *using a description language, e.g. MHEG [Multimedia and Hypermedia information coding Expert Group] or XML [eXtensible Markup Language]*

AL N *21/8545* · · · · *for generating interactive applications*

AL N *21/8547* · · · · *involving timestamps for synchronizing content*

AL N *21/8549* · · · · *Creating video summaries, e.g. movie trailer*

AL N *21/858* · · · *Linking data to content, e.g. by linking an URL to a video object or by creating a hotspot*

Principal Directorate Patent Grant Automation - Directorate Classification		
Project: **C454/A014**	Subject: **Pictorial Communication**	IPC range: **H04N**
Removal of informative references from the scheme		20 March 2009

After the latest WG meeting in Geneva, Rapporteur was invited to consider Annex 2 to the project file which contains a list of existing references in subclass H04N, submitted by the IB, and to submit an amended version as needed.

R remarks that the current project only deals with H04N 21/00, and therefore in order to prevent confusion it would be maybe better to create a specific M project for H04N references.
Having said that, here below follows the amended version with comments.

With regard to paragraphs 1 and 2 of the annex 7, R refers to the parallel project A014.

Table of references in H04N
References according to Version 2008.04

Subclass: **H04N** **Project:** **C 454**

Place	Reference to	Category	Proposed action	Comments
H04N	G01	informative	Remove and put in definition	
H04N	G08	limiting		informative, Remove and put in definition
H04N	G11B	informative	Remove and put in definition	
H04N	H03M	informative	Remove and put in definition	
H04N	H04H	informative	Remove and put in definition	
H04N 1/03	H04N 1/19	limiting		
H04N 1/032	B41C 1/02	informative	Remove and put in definition	
H04N 1/04	H04N 1/387	Precedence		
H04N 1/047	H04N 1/17	Precedence		
H04N 1/12	H04N 1/19	limiting		
H04N 1/21	H04N 1/387	Precedence		
H04N 1/21	H04N 1/41	Precedence		
H04N 1/21	G11	informative	Remove and put in definition	
H04N 1/23	H04N 1/024	limiting		
H04N 1/23	H04N 1/04	limiting		
H04N 1/38	H04N 1/387	Precedence		
H04N 1/387	B41B 19/00	informative	Remove and put in definition	
H04N 1/40	H04N 1/387	Precedence		obsolete, remove
H04N 1/401	H04N 1/403	Precedence		
H04N 1/403	H03K 5/08	informative	Remove and put in definition	
H04N 1/41	H04N 1/17	limiting		
H04N 1/48	H04N 1/52	limiting		
H04N 1/50	H04N 1/52	limiting		
H04N 1/56	H04N 1/52	Precedence		
H04N 1/58	H04N 1/62	Precedence		
H04N 3/02	H04N 3/36	Precedence		
H04N 3/02	G02B 26/10	informative	Remove and put in definition	

H04N 3/10.	H04N 3/36	Precedence		
H04N 3/10.	G02F	informative	Remove and put in definition	limiting
H04N 3/16	H03K 4/00	informative	Remove and put in definition	
H04N 3/185	G05F	informative	Remove and put in definition	
H04N 3/223	H04N 3/185	limiting		
H04N 3/26	H01J	informative	Remove and put in definition	
H04N 3/27	H04N 5/46	informative	Remove and put in definition	
H04N 5/00	H04N 3/00	limiting		
H04N 5/00	H04N 9/00	limiting		
H04N 5/04	H04N 7/24	limiting		
H04N 5/04	H03L 7/00	informative	Remove and put in definition	
H04N 5/14	H04N 5/222	Precedence		
H04N 5/21	H04N 5/911	limiting		
H04N 5/213	H04N 5/217	Precedence		
H04N 5/232	H04N 5/235	Precedence		
H04N 5/232	G03B 7/00	limiting		informative, Remove and put in definition
H04N 5/232	G03B 13/00	limiting		informative, Remove and put in definition
H04N 5/232	G03B 17/00	limiting		informative, Remove and put in definition
H04N 5/253	H04N 3/36	limiting		
H04N 5/257	H04N 5/253	Precedence		
H04N 5/268	H04H 20/00	limiting		
H04N 5/30	H04N 5/222	Precedence		
H04N 5/30	H04N 3/00	limiting		
H04N 5/30	G01S 7/52	informative	Remove and put in definition	
H04N 5/30	G01S 15/89	informative	Remove and put in definition	
H04N 5/30	H01J	informative	Remove and put in definition	
H04N 5/30	H01L	informative	Remove and put in definition	
H04N 5/335	H04N 5/32	Precedence		
H04N 5/335	H04N 5/33	Precedence		
H04N 5/38	H04N 5/14	Precedence		
H04N 5/44	H04N 5/14	Precedence		
H04N 5/445	H04N 5/50	Precedence		
H04N 5/455	H03D	informative	Remove and put in definition	
H04N 5/46	H04N 3/27	limiting		
H04N 5/50	H03J	informative	Remove and put in definition	
H04N 5/54	H04N 5/53	Precedence		
H04N 5/56	H04N 5/53	Precedence		
H04N 5/63	H04N 3/18	limiting		
H04N 5/63	G05F	informative	Remove and put in definition	
H04N 5/63	H01F	informative	Remove and put in definition	
H04N 5/63	H02J	informative	Remove and put in definition	
H04N 5/63	H02M	informative	Remove and put in definition	
H04N 5/64	A47B	limiting		
H04N 5/64	A47B 81/06	limiting		
H04N 5/66	H04N 3/00	limiting		
H04N 5/72	G02B 5/00	informative	Remove and put in definition	
H04N 5/74	G02B	informative	Remove and put in definition	
H04N 5/76	H04N 17/06	informative	Remove and put in definition	
H04N 5/76	G01D	informative	Remove and put in definition	
H04N 5/76	G11	informative	Remove and put in definition	

H04N 5/76	G11B	informative	Remove and put in definition	
H04N 5/765	G11B 31/00	limiting		
H04N 5/78	H04N 5/91	Precedence		
H04N 5/80	H04N 5/91	Precedence		
H04N 5/84	H04N 5/80	Precedence		
H04N 5/84	H04N 5/89	Precedence		
H04N 5/84	H04N 5/91	Precedence		
H04N 5/87	H04N 3/36	informative	Remove and put in definition	
H04N 5/87	H04N 5/253	informative	Remove and put in definition	
H04N 5/87	H04N 9/11	informative	Remove and put in definition	
H04N 5/89	H04N 5/91	Precedence		
H04N 5/903	H04N 5/91	Precedence		
H04N 5/907	H04N 5/91	Precedence		
H04N 5/907	H04N 5/78–H04N 5/903	limiting		
H04N 5/91	H04N 9/79	limiting		
H04N 5/913	H04N 7/167	informative	Remove and put in definition	
H04N 5/917	H04N 7/12	informative	Remove and put in definition	
H04N 5/917	H04N 7/24	limiting		
H04N 5/926	H04N 5/919	Precedence		
H04N 5/945	G11B 20/18	informative	Remove and put in definition	
H04N 7/00	H04N 3/00	limiting		
H04N 7/00	H04N 5/00	limiting		
H04N 7/00	H04N 11/00	limiting		
H04N 7/00	H04N 13/00	limiting		
H04N 7/10	H04N 7/12	Precedence		
H04N 7/12	H04N 7/24	Precedence		
H04N 7/12	H04N 7/015	limiting		
H04N 7/14	H04N 7/173	Precedence		
H04N 7/15	H04M 3/56	limiting		
H04N 7/26	H03M 7/30	informative	Remove and put in definition	limiting
H04N 7/30	H04N 7/50	Precedence		
H04N 7/30	G06F 17/14	informative	Remove and put in definition	limiting
H04N 7/32	H04N 7/48	Precedence		
H04N 7/32	H04N 7/50	Precedence		
H04N 7/38	H04B 14/06	informative	Remove and put in definition	
H04N 7/42	H04B 14/06	informative	Remove and put in definition	
H04N 7/64	H03M 13/00	informative	Remove and put in definition	limiting
H04N 9/097	G02B 27/10	informative	Remove and put in definition	
H04N 9/10	H04N 9/11	Precedence		
H04N 9/10	G02B 26/10	informative	Remove and put in definition	
H04N 9/12	H04N 9/11	Precedence		obsolete, remove
H04N 9/12	G02F	informative	Remove and put in definition	
H04N 9/14	G02B 26/10	informative	Remove and put in definition	
H04N 9/16	H04N 9/11	Precedence		
H04N 9/16	H01J 31/00	informative	Remove and put in definition	
H04N 9/18	H04N 9/27	Precedence		
H04N 9/22	H04N 9/27	Precedence		
H04N 9/285	G21K 1/08	informative	Remove and put in definition	
H04N 9/285	H01J 3/14	informative	Remove and put in definition	
H04N 9/285	H01J 29/58	informative	Remove and put in definition	
H04N 9/285	H01J 37/10	informative	Remove and put in definition	
H04N 9/455	H04N 9/45	Precedence		
H04N 9/64	H04N 9/77	Precedence		
H04N 9/68	H04N 9/71	Precedence		
H04N 9/68	H04N 9/73	Precedence		

H04N 9/74	H04N 9/65– H04N 9/73	Precedence		
H04N 9/76	H04N 9/75	Precedence		
H04N 9/77	H04N 9/67	limiting		
H04N 9/797	H04N 9/804	Precedence		
H04N 9/797	H04N 9/81	Precedence		
H04N 9/797	H04N 9/82	Precedence		
H04N 9/802	H04N 9/806	Precedence		
H04N 9/802	H04N 9/835	Precedence		
H04N 9/87	H04N 9/80	Precedence		
H04N 9/888	G11B 20/18	informative	Remove and put in definition	
H04N 11/00	H04N 9/00	limiting		
H04N 11/00	H04N 15/00	limiting		
H04N 11/02	H04N 11/04	Precedence		
H04N 11/08	H04N 11/12	limiting		
H04N 13/00	H04N 15/00	limiting		

Principal Directorate Patent Grant Automation - Directorate Classification		
Project: A014 / C454	**Subject:** Selective content distribution	**IPC range:** H04N 21
Comment		**28 October 2009**

Ref: Remark by JP, 09-Oct-09
Annex 24, proposal of removal of non-limiting references, 20-Mar-09

R **thanks JP for allowing EP to clarify the term "obsolete" which appears in the listing of the proposal of removal of non-limiting references of Annex 24:**
EP specialists do not see any reason, motivating the presence of the references currently proposed as "obsolete".
They can not think of any documents where the precedence rule applies.
In the 2nd case, the only meaningful example of a picture reproducer (9/12), where scanning in the sense of 9/11 is the CRT (9/16).
It is therefore considered sufficient to keep the 9/16 -> 9/11 reference.

It is therefore proposed that both references marked as "obsolete" should be deleted.

RdB

FR observations sur la version française		
Projet: A014 / C454	**Sujet:** Selective content distribution	H04N 21
Draft French Version		**29 May 2009**

Formatted: Indent: Before: 0.4 cm, After: 0.5 cm

CL C *5/00* ***Détails des systèmes de télévision (détails du balayage ou leur combinaison avec la production des tensions d'alimentation H04N 3/00; spécialement adaptés à la télévision en couleurs H04N 9/00; serveurs spécialement adaptés à la distribution de contenu H04N 21/20 ;dispositifs clients spécialement adaptés à la réception ou à l'interaction avec du contenu H04N 21/40)***

CL C *7/00* ***Systèmes de télévision (détails H04N 3/00, H04N 5/00 ~~;~~, spécialement adaptés à la télévision en couleurs H04N 11/00; systèmes de télévision stéréoscopiques H04N 13/00; distribution sélective de contenu H04N 21/00)***

CL C *7/16* · ***~~Systèmes à secret; Systèmes à abonnement~~ Systèmes à secret analogiques ; Systèmes à abonnement analogiques (systèmes à secret numériques ; systèmes à abonnement numériques H04N 21/00)***

CL C *7/24* · ***Systèmes pour la transmission de signaux de télévision utilisant la modulation par impulsions codées (H04N 21/00 a priorité)***

CL C *7/52* · · ***Systèmes pour la transmission d'un signal vidéo modulé par impulsions codées avec d'autres signaux modulés par impulsions codées, p.ex. un signal audio ou un signal de synchronisation (assemblage d'un flux multiplexé en combinant un flux vidéo avec d'autres contenus ou des données additionnelles, remultiplexage de flux multiplexés, insertion de bits de ~~rembourrage~~ remplissage dans le flux multiplexé, assemblage d'un flux élémentaire ~~paquetisé~~ mis en paquets au serveur H04N 21/236 ; désassemblage d'un flux multiplexé, remultiplexage de flux multiplexés, extraction ou traitement d'informations de service, désassemblage d'un flux élémentaire ~~paquetisé~~ mis en paquets ~~au~~ côté client H04N 21/434)***

AL D 7/58 (transféré ~~vers~~ en H04N 21/2365,H04N 21/434)

AL D 7/60 (transféré ~~vers~~ en H04N 21/236,H04N 21/434)

AL D 7/62 (transféré ~~vers~~ en H04N 21/242,H04N 21/431,H04N 21/434,H04N 21/8547)

CL N ***21/00*** ***Distribution sélective de contenu ~~sélective~~, p.x. télévision interactive, VOD [Vidéo à la demande] (****radiodiffusion H04H;* ***dispositions, appareils, circuits ou systèmes*** *pour la commande ou le traitement de la communication caractérisés par un protocole H04L 29/06; transmission bidirectionnelle de donnés* ***ciné*** *-vidéo en temps réel H04N 7/14)*

Field Code Changed

1. CL N ***Note***
21/00 **Ce groupe couvre :**

- **Les p~~P~~rocédés de distribution vidéo interactive~~s~~, ou leurs éléments, qui sont caractérisés par une configuration de systèmes point à multipoint et qui sont principalement employés pour la distribution ou la diffusion unidirectionnelle de données vidéo de mouvement provenant d'interactions entre des opérateurs système, p.ex. ~~(~~fournisseurs d'accès ou de services,~~)~~ ou des utilisateurs p.ex. ~~(~~abonnés,~~)~~ et des éléments système**
- **De tels systèmes comprennent des systèmes de communication dédiés, tels que des systèmes de diffusion de télévision, qui distribuent ou délivrent des données vidéo de mouvement de la façon indiquée, et qui peuvent, de plus, proposer un cadre pour d'autres communications ou services divers sous forme unidirectionnelle ou bidirectionnelle. Cependant, la vidéo occupera la majeure partie de la bande passante descendante dans le processus de distribution.**
- **Typiquement, ~~des~~ une interface pour opérateurs système ~~interagissent~~ avec des éléments ~~du~~ côté ~~transmetteur~~ émetteur ou ~~des~~ une interface utilisateur~~s interagissent~~ avec des éléments ~~du~~ côté récepteur dans le but de faciliter, par interaction avec de tels éléments, le contrôle dynamique du traitement de données ou du flux de données ~~à des~~en différents points ~~variés~~ du système. Cette interaction est ~~typiquement~~ de nature occasionnelle ou intermittente.**
- **Les p~~P~~**rocessus, **les** systèmes ou **les** éléments, ~~particulièrement~~ **spécialement** adaptés à la génération, **la** distribution et au traitement de données~~,~~ qui sont ~~soit~~ associé~~e~~es au contenu vidéo ~~(~~p.x. m~~é~~tadonnées, ~~évaluations~~**estimations, ~~)~~** ou **qui sont** liées à l'utilisateur ou **à** son environnement et qui ont été rassemblées de façon active ou passive. Ces données sont employées pour faciliter l'interaction ~~ou~~ **,** modifier ou cibler le contenu. **[nouveau.]**

2. Dans ~~ce~~ **le présent** groupe **à chaque niveau hiérarchique, sauf indication contraire, le classement s'effectue**~~la règle de la priorité à la première place est appliquée, c.à.d. à chaque niveau hiérarchique, la classification se fait~~ à la première place appropriée. **[nouveau.]**

Formatted: Font: Not Italic
Formatted: Font: Not Italic
Formatted: Font: Not Italic
Formatted: Font: Not Italic
Formatted: Font: Not Italic
Formatted: Font: Not Italic
Formatted: Font: Not Italic
Formatted: Font: Not Italic
Formatted: Font: Not Italic
Formatted: Font: Not Italic
Formatted: Font: Not Italic
Formatted: Font: Not Italic
Formatted: Font: Not Italic
Formatted: Font: Not Italic

AL N ***21/20*** · *Serveurs ~~spécifiquement~~ spécialement adaptés ~~pour~~ à la distribution de contenu, p.x. serveurs VOD; Leurs ~~opérations~~fonctionnements*

AL N ***21/21*** · · ***~~Eléments~~ Composants de serveur ou architectures de serveur***

AL N ***21/214*** · · · ***Plate-forme spécialisée de serveur, p.x. serveur situé dans un avion, un hôtel ou un~~,~~ hôpital***

AL N ***21/218*** · · · *Source du contenu audio ou vidéo, p.x. réseaux de disques ~~local~~locaux*

AL N 21/2183 · · · · Mémoire cache

AL N 21/2187 · · · · ~~Transmission en~~Alimentation directe

AL N 21/222 · · · Serveurs secondaires, p.ex. serveur ~~proxy~~mandataire ou ~~,~~ tête de réseau de télévision par câble

AL N 21/2225 · · · · Serveurs VOD locaux

AL N 21/226 · · · ~~Eléments~~ Composants internes ~~de~~ du serveur

AL N 21/23 · · Traitement ~~du~~ de contenu ou de~~s~~ données additionnelles; Opérations élémentaires de serveur; I~~i~~ntergiciel de serveur

AL N 21/231 · · · Opération de stockage de contenu, p.ex. mise en mémoire cache de films pour stockage à court terme, réplication de données sur plusieurs serveurs, ou ~~priorisation~~ établissement de priorité des données pour l'effacement

AL N 21/2312 · · · · Placement de données sur le réseau de disques

AL N 21/2315 · · · · · utilisant l'entrelacement

AL N 21/2318 · · · · · utilisant la mise en bande

AL N 21/232 · · · Opération de récupération de contenu au sein d'un serveur, p.ex. lecture de flux vidéo du réseau de disques

AL N *21/233* · · · *Traitement de flux audio élémentaires*

AL N *21/234* · · · *Traitement de flux vidéo élémentaires, p.ex. raccordement de flux vidéo, manipulation de graphes de scènes MPEG-4 (procédés de codage ou de transcodage vidéo ~~per se~~ en soi H04N7/26)*

AL N *21/2343* · · · · *impliquant des opérations de reformatage de signaux vidéo pour la distribution ou la mise en conformité avec les requêtes des utilisateurs finaux ou les exigences des dispositifs des utilisateurs finaux*

AL N *21/2347* · · · · *impliquant le cryptage de flux vidéo (dispositions pour les communications secrètes ou protégées H04L 9/00; systèmes à secret analogiques H04N7/16)*

AL N *21/235* · · · *Traitement de données additionnelles, p.ex. brouillage de données additionnelles~~,~~ ou traitement de descripteurs de contenu*

AL N *21/236* · · · *Assemblage d'un flux multiplexé, p.ex. flux de transport, en combinant un flux vidéo avec d'autres contenus ou données additionnelles, p.ex. insertion d'une adresse ~~localisateur de ressources~~ universelle [URL] dans un flux vidéo, multiplexage de données de logiciel dans un flux vidéo; remultiplexage de flux multiplexés; insertion de bits de ~~rembourrage~~ remplissage dans le flux multiplexé, p.ex. pour obtenir un débit constant; assemblage d'un flux élémentaire ~~paquetisé~~mis en paquet*

AL N *21/2362* · · · · *Génération ou traitement d'informations de service [SI]*

AL N *21/2365* · · · · *Multiplexage de plusieurs flux vidéo*

AL N *21/2368* · · · · *Multiplexage de flux audio et vidéo*

AL N 21/237 . . . *Communication avec un serveur de données additionnelles*

AL N 21/238 . . . ~~*Interfacage*~~*Interfaçage de la voie descendante du réseau de transmission, p.ex. adaptation du débit de transmission d'un flux vidéo à la bande passante du réseau; Traitement de flux multiplexés*

AL N 21/2381 . . . . *Adaptation du flux multiplexé à un réseau spécifique, p.ex. un réseau à protocole Internet [IP]*

AL N 21/2383 . . . . *Codage de canal d'un flux binaire numérique, p.ex. modulation*

AL N 21/2385 . . . . *Allocation de canaux (H04N21/266 a priorité); Allocation de bande passante (H04N 21/24 a priorité~~e~~)*

AL N 21/2387 . . . . *Traitement de flux en réponse à une requête de reproduction par un utilisateur final, p.ex. pour la lecture à vitesse variable ('trick play')*

AL N 21/2389 . . . . *Traitement de flux multiplexé, p.ex. cryptage de flux multiplexé*

AL N 21/239 . . . *Interfaçage de la voie montante du réseau de transmission, p.ex. ~~priorisation~~ établissement de priorité des requêtes de clients*

AL N 21/24 . . . *Surveillance de procédés ou de ressources, p.ex. surveillance de la charge du serveur, de la bande passante disponible ou~~e,~~ des requêtes effectuées sur la voie montante*

AL N 21/241 · · · *Procédés de systèmes d'exploitation [OS], p.ex. initialisation du serveur (dispositions pour la commande par programme G06F9/00)*

AL N 21/242 · · · *Procédés de synchronisation, p.ex. traitement de références d'horloge de programme [PCR]*

AL N 21/25 · · *Opérations de gestion réalisées par le serveur pour faciliter la distribution de contenu ou administrer des données liées aux utilisateurs finaux ou aux dispositifs clients, p.ex. authentification des utilisateurs finaux ou des dispositifs clients ou~~,~~ apprentissage des préférences des utilisateurs pour ~~recommender~~recommander des films*

AL N 21/254 · · · *Gestion au sein du serveur de données additionnelles, p.ex. serveur d'achat~~,~~ ou serveur de gestion de droits*

AL N *21/2543* · · · · ***Facturation* (*schémas, architectures ou protocoles de paiement G06Q 20/00; commerce électronique G06Q 30/00*)**

AL N *21/2547* · · · · · ***Facturation de tiers, p.ex. facturation d'un publicitaire***

AL N 21/258 · · · *Gestion de données liées aux clients ou aux utilisateurs finaux, p.ex. gestion des capacités des clients, préférences ou données démographiques des utilisateurs, traitement des multiples préférences des utilisateurs finaux pour générer des données collaboratives*

AL N 21/262 · · · *Ordonnancement de la distribution de contenus ou de données additionnelles, p.ex. envoi de données additionnelles en dehors des périodes de pointe, mise à jour de modules de logiciel, calcul de la fréquence de transmission de carrousel, retardement de la transmission de flux vidéo, génération de listes de reproduction*

AL N 21/266 · · · *Gestion de canal ou de contenu, p.ex. génération et gestion de clés et de messages de titres d'accès dans un système d'accès conditionnel, fusion d'un canal de monodiffusion de VOD dans un canal multidiffusion*

AL N 21/2662 · · · · *Contrôle de la complexité du flux vidéo, p.ex. en mettant à l'échelle la résolution ou le débit binaire du flux vidéo en fonction des capacités du client*

AL N 21/2665 · · · · *Rassemblement de contenus provenant de différentes sources, p.ex. Internet et satellite*

AL N 21/2668 · · · · *Création d'un canal pour un groupe dédié d'utilisateurs finaux, p.ex. en insérant des publicités ciblées dans un flux vidéo en fonction des profils des utilisateurs finaux*

AL N 21/27 · · *Applications pour utilisateurs finaux basées sur un serveur*

AL N 21/274 · · · *Stockage de contenu ou données additionnelles spécifiques aux utilisateurs finaux en réponse aux requêtes des utilisateurs finaux*

AL N 21/2743 · · · · *Hébergement vidéo de données téléchargées ~~vers l'amont~~à partir ~~du~~ du dispositif client*

AL N 21/2747 · · · · *Stockage à distance de programmes vidéo reçus via la voie descendante, p.ex. du serveur*

AL N 21/278 · · · *Base de données de descripteurs de contenu ou service de répertoire pour accès par les utilisateurs finaux*

AL N 21/40 · *Dispositifs clients ~~spécifiquement~~ spécialement adaptés ~~pour~~ à la réception de contenu ou à l'interaction avec le contenu, p.ex. boîtier décodeur [STB]; Leurs opérations*

AL N ***21/41*** · · *Structure de client; ~~s~~Structure de périphérique de client*

AL N ***21/414*** · · · *Plate~~-~~-formes spécialisées de client, p.ex. récepteur au sein d'une voiture~~,~~ ou intégré dans un appareil mobile*

AL N ***21/4143*** · · · · ***Ordinateur personnel [PC]***

AL N ***21/4147*** · · · · ***Enregistreur vidéo personnel [PVR] (H04N 5/76 a priorité)***

AL N ***21/418*** · · · *Carte externe destinée à être utilisée en combinaison avec le dispositif client, p.ex. pour l'accès conditionnel*

AL N ***21/4185*** · · · · ***pour le paiement (mécanismes actionnés par carte d'identité codée ou carte de crédit codée pour déclencher ou actionner des appareils de vente, de location, de distribution de pièces de monnaie ou de papier-monnaie, ou de remboursement G07F 7/08; schémas, architectures ou protocoles de paiement G06Q 20/00; commerce électronique G06Q 30/00)***

AL N ***21/422*** · · · ***Périphériques d'entrée uniquement, p.ex. système de positionnement global [GPS] (Dispositions d'entrée ou dispositions d'entrée et de sortie combinées pour l'interaction entre l'utilisateur et le calculateur G06F 3/01)***

AL N ***21/4223*** · · · · ***Caméras (H04N 5/225 a priorité)***

AL N ***21/4227*** · · · · *Entrée à distance par un utilisateur situé à distance du dispositif client, p.ex. au travail*

AL N ***21/426*** · · · ***Eléments internes de client (H04N 5/44 a priorité)***

AL N 21/43 · · *Traitement de contenu ou données additionnelles, p.ex. démultiplexage de données additionnelles d'un flux vidéo numérique; Opérations élémentaires de client, p.ex surveillance du réseau domestique~~,~~ ou synchronisation de l'horloge du décodeur; Intergiciel de client*

AL N 21/431 · · · *Génération d'interfaces visuelles; Rendu de contenu ou données additionnelles (circuits de réception pour visualisation d'information additionnelle H04N5/445)*

AL N 21/432 · · · *Opération de récupération de contenu d'un support de stockage local, p.ex. disque dur*

AL N 21/433 · · · *Opération de stockage de contenu, p.ex. opération de stockage en réponse à une requête de pause~~,~~ ou opérations de cache*

AL N 21/4335 · · · · *Opérations de gestion interne, ~~e.g~~p.ex.~~.~~ ~~priorisation~~ établissement de priorité de contenu pour l'effacement dû à des restrictions d'espace de stockage*

AL N 21/434 · · · *Désassemblage d'un flux multiplexé, p.ex. démultiplexage de flux audio et vidéo, extraction de données additionnelles d'un flux vidéo; R~~r~~emultiplexage de flux multiplexés; Extraction ou traitement de SI; Désassemblage d'un flux élémentaire ~~paquetisé~~ mis en paquet*

AL N 21/435 · · · *Traitement de données additionnelles, p.ex. décryptage de données additionnelles~~,~~ ou reconstruction de logiciel à partir de modules extraits du flux de transport*

AL N 21/436 · · · *Interfaçage d'un réseau de distribution local, p.ex. communication avec un autre STB~~,~~ ou à l'intérieur de la maison*

AL N 21/4363 . . . . *Adaptation du flux vidéo à un réseau local spécifique, p.ex. un réseau IEEE 1394 ou Bluetooth*

AL N 21/4367 . . . . *Etablissement d'une communication protégée entre le client et un dispositif périphérique ou une carte à puces (Dispositions pour les communications secrètes ou protégées H04L 9/00; Dispositions de sécurité pour protéger les calculateurs ou les systèmes de calculateurs contre une activité non autorisée G06F 21/00)*

AL N 21/437 . . . *Interfaçage de la voie montante du réseau de transmission, p.ex. pour transmettre des requêtes de client à un serveur VOD*

AL N 21/438 . . . *Interfaçage de la voie descendante du réseau de transmission provenant d'un serveur, p.ex. récupération de paquets MPEG d'un réseau IP*

AL N 21/4385 . . . . *Traitement de flux multiplexé, p.ex. décryptage de flux multiplexé*

AL N 21/439 . . . *Traitement de flux audio élémentaires*

AL N 21/44 . . . *Traitement de flux élémentaires vidéo, p.ex. raccordement d'un clip vidéo récupéré d'un stockage local avec un flux vidéo en entrée~~,~~ ou rendu de scènes selon des graphes de scène MPEG-4*

AL N 21/4402 . . . . *impliquant des opérations de reformatage de signaux vidéo pour la redistribution domestique, le stockage ou l'affichage en temps réel*

AL N 21/4405 . . . . *impliquant le décryptage de flux vidéo (dispositions pour les communications secrètes ou protégées H04L 9/00)*

AL N *21/4408* . . . . *impliquant le cryptage de flux vidéo, p.ex. re-cryptage d'un flux vidéo décrypté pour la redistribution dans un réseau domestique (dispositions pour les communications secrètes ou protégées H04L 9/00)*

Formatted: French France
Formatted: French France
Formatted: French France
Formatted: French France

AL N *21/441* . . . *Acquisition de l'identification d'un utilisateur final (authentification dans les réseaux de communication sans fil H04W 12/06)*

AL N *21/4415* . . . . *utilisant les caractéristiques biométriques de l'utilisateur, p.ex. par reconnaissance de la voix ou balayage d'empreintes digitales (Méthodes ou dispositions pour la reconnaissance de formes G06K 9/00)*

AL N *21/442* . . . *Surveillance de procédés ou de ressources, p.ex. détection de la défaillance d'un dispositif d'enregistrement, surveillance de la bande passante sur la voie descendante, du nombre de visualisations d'un film, de l'espace de stockage disponible dans le disque dur interne*

AL N *21/4425* . . . . *Surveillance d'erreurs de traitement au niveau client ou de défaillance matérielle (surveillance dans le traitement électrique de données numériques G06F 11/00)*

AL N *21/443* . . . *Procédés de système d'exploitation, p.ex. démarrage d'un décodeur STB, implémentation d'une machine virtuelle Java dans un décodeur STB, gestion d'énergie dans un décodeur STB (dispositions pour le chargement ou le lancement de programme G06F 9/445)*

AL N *21/45* . . *Opérations de gestion réalisées par le client pour faciliter la réception de contenu ou l'interaction avec le contenu ou l'administration des données liées à l'utilisateur final ou au dispositif client lui-même, p.ex. apprentissage des préférences d'utilisateurs pour ~~recommender~~recommander des films~~,~~ ou résolution de conflits d'ordonnancement*

AL N *21/454* . . . *Filtrage de contenu, p.ex. blocage des publicités*

AL N 21/4545 · · · · *Signaux d'entrée aux algorithmes de filtrage, p.ex. filtrage d'une région de l'image*

AL N 21/458 · · · *Ordonnancement de contenu pour créer un flux personnalisé, p.ex. en combinant une publicité stockée localement avec un flux ~~en~~ d entrée; Opérations de mise à jour, p.ex. pour modules de système d'exploitation*

AL N 21/462 · · · *Gestion de contenu ou de données additionnelles, p.ex. création d'un guide de programmes électroniques maître à partir de données reçues par internet et d'une tête de réseau~~,~~ ou contrôle de la complexité d'un flux vidéo en ~~mettant à l'échelle~~dimensionnant la résolution ou le débit en fonction des capacités du client*

AL N 21/4623 · · · · *Traitement de messages de titres d'accès, p.ex. message de contrôle d'accès [ECM], message de gestion d'accès [EMM]*

AL N *21/4627* · · · · ***Gestion de droits***

AL N 21/466 · · · *Procédé d'apprentissage pour la gestion intelligente, p.ex. apprentissage des préférences d'utilisateurs pour ~~recommender~~recommander des films*

AL N *21/47* · · ***Applications pour utilisateurs finaux (Techniques d'interaction pour les interfaces utilisateur graphiques G06F 3/048; circuits de réception pour visualisation d'information additionnelle H04N 5/445)***

AL N 21/472 · · · *Interface pour utilisateurs finaux pour la requête de contenu, de données additionnelles ou de services; Interface pour utilisateurs finaux pour l'interaction avec le contenu, p.ex. pour la réservation de contenu ou la ~~définition~~ mise en place de rappels, pour la requête de notification d'évènement ~~,~~ ou pour la manipulation de contenus affichés~~u~~*

AL N 21/4722 · · · · *pour la requête de données additionnelles associées au contenu*

AL N 21/4725 · · · · · *utilisant des régions interactives de l'image, p.ex. zones ~~actives~~ sensibles ('hot spots')*

AL N 21/4728 · · · · *pour la sélection d'une région d'intérêt [ROI], p.ex. pour la requête d'une version de plus haute résolution ~~de la~~d'une région sélectionnée*

AL N 21/475 · · · *Interface pour utilisateurs finaux pour ~~saisir~~ acquiérir des données d'utilisateurs finaux, p.ex. numéro d'identification personnel [PIN~~],~~] ou données de préférences*

AL N 21/478 · · · *Services additionnels, p.ex. affichage de l'identification d'un appelant téléphonique~~,~~ ou application d'achat*

AL N *21/4782* · · · · ***Navigation sur le Web***

AL N *21/4784* · · · · ***réception de récompenses (schémas, architectures ou protocoles de paiement G06Q 20/00; commerce électronique G06Q 30/00)***

AL N *21/4786* · · · · *communication par messages électroniques~~e-mail~~*

Formatted: French France

Formatted: French France

AL N *21/4788* · · · · ***communication avec d'autres utilisateurs, p.ex. discussion en ligne***

AL N 21/482 · · · *Interface pour utilisateurs finaux pour la sélection de programmes*

AL N *21/485* · · · ***Interface pour utilisateurs finaux pour la configuration du client***

AL N *21/488* · · · ***Services de données, p.ex. téléscripteur d'actualités***

AL N *21/60 · Structure du réseau ou procédés pour la distribution de vidéo entre le serveur et le client ou entre des clients distants (réseaux de données à commutation H04L 12/00; réseaux de télécommunications sans fil H04W) ; Signalisation de contrôle entre clients, serveur et éléments du réseau; Transmission de données de gestion entre serveur et client; Détails de la communication entre serveur et client*

AL N *21/61 · · Structure physique de réseau; Traitement de signal (H04B a priorité)*

AL N *21/63 · · Signalisation de contrôle entre des éléments du client, serveur et réseau; Procédés liés au réseau pour la distribution de vidéo entre serveur et clients, p.ex. transmission de la couche de base et des couches d'amélioration sur des voies de transmission différentes, mise en œuvre d'une communication pair à pair via internet entre des ~~récepteurs~~ décodeurs STB; Protocoles de communication; Adressage*

AL N *21/633 · · · Signaux de commande issus du serveur dirigés vers des éléments du réseau ou du client*

AL N *21/6332 · · · · vers le client*

AL N *21/6334 · · · · · pour l'autorisation, p.ex. en transmettant une clé (dispositions pour les communications secrètes ou protégées H04L 9/00)*

AL N *21/6336 · · · · · vers le décodeur*

AL N *21/6338 · · · · vers le réseau*

AL N *21/637 · · · Signaux de commande émis par le client et dirigés vers les éléments du serveur ou du réseau*

AL N *21/6371 · · · · vers le réseau*

AL N *21/6373 · · · · pour le contrôle du débit*

AL N *21/6375 · · · · pour demander une retransmission*

AL **N** ***21/6377*** · · · · ***vers le serveur***

AL **N** ***21/6379*** · · · · · ***vers le codeur***

AL **N** ***21/64*** · · · ***Adressage***

AL **N** ***21/6402*** · · · · ***Allocation d'adresses pour des clients***

AL **N** ***21/6405*** · · · · ***Multidiffusion***

AL **N** ***21/6408*** · · · · ***Monodiffusion***

AL **N** ***21/643*** · · · ***Protocoles de communication***

AL **N** ***21/6433*** · · · · ***~~Digital Storage Media – Command and Control Protocol~~ Protocole de commande et de contrôle de support de stockage numérique [DSM-CC]***

Formatted: French France

Formatted: French France

Formatted: French France

AL **N** ***21/6437*** · · · · ***Protocole de ~~transport~~ transmission en temps réel [RTP]***

AL **N** ***21/647*** · · · ***Signalisation de contrôle entre des éléments du réseau et serveur ou clients ;Processus réseau pour la dictribution vidéo entre serveur et clients, ~~,~~ p.ex. contrôle de la qualité du flux vidéo en éliminant des paquets, protection du contenu contre une modification non autorisée dans le réseau, surveillance de la charge du réseau~~,~~ ou réalisation d'une passerelle entre deux réseaux différents, p.ex. entre réseau IP et réseau sans fil***

AL **N** ***21/65*** · · ***Transmission de données de gestion entre le client et le serveur***

AL **N** ***21/654*** · · · ***Transmission du serveur vers le client***

AL **N** ***21/6543*** · · · · ***pour forcer certaines opérations ~~au~~ du client, p.ex. l´enregistrement***

AL N *21/6547* · · · · *comprenant des paramètres, p.ex. pour l'initialisation du client*

AL N *21/658* · · · *Transmission du client vers le serveur*

AL N *21/6583* · · · · *~~Accusation~~ Accusé de réception*

AL N *21/6587* · · · · *Paramètres de contrôle, p.ex. commande de lecture à vitesse variable (´trick play´) ou~~,~~ sélection d'un point de vue*

AL N *21/80* · *Génération ou traitement de contenu ou de données additionnelles par un créateur de contenu, indépendamment du processus de distribution; Contenu ~~per se~~en soi*

AL N *21/81* · · *Composants mono média du contenu*

AL N *21/83* · · *Génération ou traitement de données de protection ou de description associées au contenu ; Structuration du contenu*

AL N *21/835* · · · *Génération de données de protection, p.ex. certificats*

AL N *21/8352* · · · · *impliquant des donnés d'identification du contenu ou de la source, p. ex. ´identificateur unique de matériel~~Unique Material Identifier´~~ [UMID]*

AL N *21/8355* · · · · *impliquant des données sur l'utilisation, p.ex. nombre de copies ou de visualisations autorisées*

AL N *21/8358* · · · · *impliquant des filigranes numériques*

AL N *21/84* · · · *Génération ou traitement de données de description, p. ex. descripteurs de contenu*

AL N *21/8405* · · · · *~~R~~représentés par des mots clés*

AL N ***21/845*** **· · ·** ***Structuration du contenu, p. ex. décomposition du contenu en segments temporels***

AL N ***21/85*** **· ·** ***Assemblage du contenu, ~~g~~Génération d'applications multimédia***

AL N ***21/854*** **· · ·** ***Création de contenu***

AL N ***21/8541*** **· · · ·** ***~~I~~impliquant des embranchements, p. ex. vers des fins d'histoire différentes***

AL N ***21/8543*** **· · · ·** ***u~~U~~tilisant un langage de description, p. ex. norme MHEG [*** *´Multimedia and Hypermedia information coding Expert Group]´* ***~~[MHEG], ´eXtensible Markup Language~~langage de balisage extensible´*** *[XML]*

Formatted: French France

Formatted: French France

Formatted: French France

Formatted: French France

AL N ***21/8545*** **· · · ·** ***pour générer des applications interactives***

AL N ***21/8547*** **· · · ·** ***~~I~~impliquant des marquages temporels pour synchroniser le contenu***

AL N ***21/8549*** **· · · ·** ***Création de résumés vidéo p. ex. bande annonce***

AL N ***21/858*** **· · ·** ***Création de liens entre données et contenu, p. ex. en liant un URL à un objet vidéo en créant une zone ~~active~~ sensible('hotspot')***

Principal Directorate Patent Grant Automation - Directorate Classification		
Project: A014 / C454	**Subject:** Selective content distribution	**IPC range:** H04N 21
Proposal French Version		**13 Nov 2009**

Ref: Annex 19, proposal French Version, 02-Jun-09
Annex 26, comments, 04-Nov-09

R **thanks FR for its comments on the initial proposal of the French Versions of Annex 19:**
EP specialists do not completely agree with all amendments proposed by FR.
In the proposal below the comments of FR have therefore been kept in as a reference.

RdB

CL C ***5/00 Détails des systèmes de télévision (détails du balayage ou leur combinaison avec la production des tensions d'alimentation H04N 3/00; spécialement adaptés à la télévision en couleurs H04N 9/00; serveurs spécialement adaptés à la distribution de contenu H04N 21/20 ;dispositifs clients spécialement adaptés à la réception ou à l'interaction avec du contenu H04N 21/40)***

CL C ***7/00 Systèmes de télévision (détails H04N 3/00, H04N 5/00 ~~;~~, spécialement adaptés à la télévision en couleurs H04N 11/00; systèmes de télévision stéréoscopiques H04N 13/00; distribution sélective de contenu H04N 21/00)***

CL C ***7/16 · ~~Systèmes à secret; Systèmes à abonnement~~ Systèmes à secret analogiques ; Systèmes à abonnement analogiques (systèmes à secret numériques ; systèmes à abonnement numériques H04N 21/00)***

CL C ***7/24 · Systèmes pour la transmission de signaux de télévision utilisant la modulation par impulsions codées (H04N 21/00 a priorité)***

CL C ***7/52 · · Systèmes pour la transmission d'un signal vidéo modulé par impulsions codées avec d'autres signaux modulés par impulsions codées, p.ex. un signal audio ou un signal de synchronisation (assemblage d'un flux multiplexé en combinant un flux vidéo avec d'autres contenus ou des données additionnelles, remultiplexage de flux multiplexés, insertion de bits de ~~rembourrage~~ remplissage dans le flux multiplexé, assemblage d'un flux élémentaire ~~paquetisé~~ mis en paquets au serveur H04N 21/236 ; désassemblage d'un flux multiplexé, remultiplexage de flux multiplexés, extraction ou traitement d'informations de service, désassemblage d'un flux élémentaire ~~paquetisé~~ mis en paquets du ~~au~~ côté du client H04N 21/434)***

AL D 7/58 (transféré ~~vers~~ en H04N 21/2365,H04N 21/434)

AL D 7/60 (transféré ~~vers~~ en H04N 21/236,H04N 21/434)

AL D 7/62 (transféré ~~vers~~ en H04N 21/242,H04N 21/431,H04N 21/434,H04N 21/8547)

CL N *21/00* *Distribution sélective de contenu ~~sélective~~, p.ex. télévision interactive, VOD [Vidéo à la demande] (*radiodiffusion H04H; **dispositions, appareils, circuits ou systèmes pour la commande ou le traitement de la communication caractérisés par un protocole H04L 29/06; transmission bidirectionnelle de donnés ~~ciné~~ vidéo en temps réel H04N 7/14)**

Field Code Changed
Field Code Changed
Field Code Changed

1. CL N *Note*
***21/00* Ce groupe couvre :**

- **Les p~~P~~rocédés interactifs de distribution vidéo ~~interactives~~, ou leurs éléments, qui sont caractérisés par une configuration de systèmes point à multipoint et qui sont principalement employés pour la distribution ou la diffusion unidirectionnelle de données vidéo ~~de mouvement~~ provenant d'interactions entre des opérateurs système, p.ex. ~~(~~fournisseurs d'accès ou de services,~~)~~ ou des utilisateurs, p.ex. ~~(~~abonnés,~~)~~ et des éléments système**
- **De tels systèmes comprennent des systèmes de communication dédiés, tels que des systèmes de diffusion de télévision, qui distribuent ou délivrent des données vidéo ~~de mouvement~~ de la façon indiquée, et qui peuvent, de plus, proposer un cadre pour d'autres communications ou services divers sous forme unidirectionnelle ou bidirectionnelle. Cependant, la vidéo occupera la majeure partie de la bande passante descendante dans le processus de distribution.**
- **Typiquement, ~~des~~des ~~une interface pour~~ opérateurs système interagissent ~~interagissent~~ avec des éléments ~~du~~ de l'~~côté transmetteur~~ émetteur ou ~~des~~des ~~une interface~~ utilisateurs interagissent~~s interagissent~~ avec des éléments ~~du~~ du~~côté~~ récepteur dans le but de faciliter, par interaction avec de tels éléments, le contrôle dynamique du traitement de données ou du flux de données ~~à des~~en différents points ~~variés~~ du système. Cette interaction est typiquement ~~typiquement~~ de nature occasionnelle ou intermittente.**
- **Les p~~P~~rocédés~~cessus~~, les** systèmes ou **les** éléments, ~~particulièrement~~ **spécialement** adaptés à la génération, **à la** distribution et au traitement de données~~,~~ qui sont ~~soit~~ associé~~e~~es au contenu vidéo, ~~(~~p.ex. m~~é~~etadonnées **ou**~~,~~ ~~évaluations~~**évaluations du contenu~~estimations~~**, ~~)~~ ou **qui sont** liées à l'utilisateur ou **à** son environnement et qui ont été rassemblées de façon active ou passive. Ces données sont employées pour faciliter l'interaction ~~ou~~ , modifier ou cibler le contenu. **[nouveau.]**

2. Dans ~~ce~~ **le présent** groupe**, la règle de la priorité à la première place est appliquée, c.à.d à chaque niveau hiérarchique, ~~sauf indication contraire,~~ le classement s'effectue**~~la règle de la priorité à la première place est appliquée, c.à.d. à chaque niveau hiérarchique, la classification se fait~~ à la première place appropriée. **[nouveau.]**

AL N *21/20* · *Serveurs ~~spécifiquement~~ spécialement adaptés ~~pour~~ à la distribution de contenu, p.ex. serveurs VOD; Leurs ~~opérations~~opérations~~fonctionnements~~*

AL N *21/21* · · *Eléments ~~Eléments C~~composants de serveur ou architectures de serveur*

Formatted: Font: Not Italic
Formatted: Font: Not Italic
Formatted: Font: Not Italic
Formatted: Font: Not Italic
Formatted: Font: Not Italic
Formatted: Font: Not Italic
Formatted: Font: Not Italic
Formatted: Font: Not Italic
Formatted: Font: Not Italic
Formatted: Font: Not Italic
Formatted: Font: Not Italic
Formatted: Font: Not Italic
Formatted: Font: Not Italic
Formatted: Font: Not Italic
Formatted: Font: Not Italic
Formatted: Font: Not Italic
Formatted: Font: Not Italic
Formatted: Font: Not Italic

AL N ***21/214*** · · · ***Plate-forme spécialisée de serveur, p.ex. serveur situé dans un avion, un hôtel ou un~~,~~ hôpital***

AL N ***21/218*** · · · *Source du contenu audio ou vidéo, p.ex. réseaux de disques ~~local~~locaux*

AL N ***21/2183*** · · · · *Mémoire cache*

AL N ***21/2187*** · · · · ***~~Transmission en~~Transmission en~~Alimentation~~ directe***

AL N ***21/222*** · · · ***Serveurs secondaires, p.ex. serveur ~~prox~~proxy~~ymandataire~~ ou ~~,~~ tête de réseau de télévision par câble***

AL N ***21/2225*** · · · · ***Serveurs VOD locaux***

AL N ***21/226*** · · · *~~Eléments~~ Composants internes ~~de~~ du serveur*

AL N ***21/23*** · · ***Traitement ~~du~~ de contenu ou de~~s~~ données additionnelles; Opérations élémentaires de serveur; I~~i~~ntergiciel de serveur***

AL N ***21/231*** · · · *Opération de stockage de contenu, p.ex. mise en mémoire cache de films pour stockage à court terme, réplication de données sur plusieurs serveurs, ou ~~priorisation~~ établissement de priorité des données pour l'effacement*

AL N ***21/2312*** · · · · *Placement de données sur le réseau de disques*

AL N ***21/2315*** · · · · · ***utilisant l'entrelacement***

AL N ***21/2318*** · · · · · ***utilisant la mise en bande***

AL N ***21/232*** · · · *Opération de récupération de contenu au sein d'un serveur, p.ex. lecture de flux vidéo du réseau de disques*

AL N ***21/233*** · · · ***Traitement de flux audio élémentaires***

AL N ***21/234*** · · · *Traitement de flux vidéo élémentaires, p.ex. raccordement de flux vidéo, manipulation de graphes de scènes MPEG-4 (procédés de codage ou de transcodage vidéo ~~per se~~ en soi H04N7/26)*

AL N ***21/2343*** · · · · *impliquant des opérations de reformatage de signaux vidéo pour la distribution ou la mise en conformité avec les requêtes des utilisateurs finaux ou les exigences des dispositifs des utilisateurs finaux*

AL N ***21/2347*** · · · · *impliquant le cryptage de flux vidéo (dispositions pour les communications secrètes ou protégées H04L 9/00; systèmes à secret analogiques H04N7/16)*

AL N ***21/235*** · · · *Traitement de données additionnelles, p.ex. brouillage de données additionnelles~~,~~ ou traitement de descripteurs de contenu*

AL N ***21/236*** · · · *Assemblage d'un flux multiplexé, p.ex. flux de transport, en combinant un flux vidéo avec d'autres contenus ou données additionnelles, p.ex. insertion d'une adresse ~~localisateur de ressources~~ universelle [URL] dans un flux vidéo, multiplexage de données de logiciel dans un flux vidéo; remultiplexage de flux multiplexés; insertion de bits de ~~rembourrage~~ remplissage dans le flux multiplexé, p.ex. pour obtenir un débit constant; assemblage d'un flux élémentaire ~~paquetisé~~mis en paquet*

AL N 21/2362 · · · · *Génération ou traitement d'informations de service [SI]*

AL N 21/2365 · · · · ***Multiplexage de plusieurs flux vidéo***

AL N 21/2368 · · · · *Multiplexage de flux audio et vidéo*

AL N 21/237 · · · *Communication avec un serveur de données additionnelles*

AL N 21/238 · · · ~~*Interfacage*~~*Interfaçage de la voie descendante du réseau de transmission, p.ex. adaptation du débit de transmission d'un flux vidéo à la bande passante du réseau; Traitement de flux multiplexés*

AL N 21/2381 · · · · *Adaptation du flux multiplexé à un réseau spécifique, p.ex. un réseau à protocole Internet [IP]*

AL N 21/2383 · · · · *Codage de canal d'un flux binaire numérique, p.ex. modulation*

AL N 21/2385 · · · · *Allocation de canaux (H04N21/266 a priorité); Allocation de bande passante (H04N 21/24 a priorité~~e~~)*

AL N 21/2387 · · · · *Traitement de flux en réponse à une requête de reproduction par un utilisateur final, p.ex. pour la lecture à vitesse variable ('trick play')*

AL N 21/2389 · · · · *Traitement de flux multiplexé, p.ex. cryptage de flux multiplexé*

AL N 21/239 · · · *Interfaçage de la voie montante du réseau de transmission, p.ex. ~~priorisation~~ établissement de priorité des requêtes de clients*

AL N 21/24 · · · *Surveillance de procédés ou de ressources, p.ex. surveillance de la charge du serveur, de la bande passante disponible ou~~e,~~ des requêtes effectuées sur la voie montante*

AL N 21/241 · · · *Procédés de systèmes d'exploitation [OS], p.ex. initialisation du serveur (dispositions pour la commande par programme G06F9/00)*

AL N 21/242 · · · *Procédés de synchronisation, p.ex. traitement de références d'horloge de programme [PCR]*

AL N 21/25 · · *Opérations de gestion réalisées par le serveur pour faciliter la distribution de contenu ou administrer des données liées aux utilisateurs finaux ou aux dispositifs clients, p.ex. authentification des utilisateurs finaux ou des dispositifs clients ou~~,~~ apprentissage des préférences des utilisateurs pour ~~recommender~~recommander des films*

AL N 21/254 · · · *Gestion au sein du serveur de données additionnelles, p.ex. serveur d'achat~~,~~ ou serveur de gestion de droits*

AL N *21/2543* · · · · ***Facturation (schémas, architectures ou protocoles de paiement G06Q 20/00; commerce électronique G06Q 30/00)***

AL N *21/2547* · · · · · ***Facturation de tiers, p.ex. facturation d'un publicitaire***

AL N 21/258 · · · *Gestion de données liées aux clients ou aux utilisateurs finaux, p.ex. gestion des capacités des clients, préférences ou données démographiques des utilisateurs, traitement des multiples préférences des utilisateurs finaux pour générer des données collaboratives*

AL N 21/262 . . . *Ordonnancement de la distribution de contenus ou de données additionnelles, p.ex. envoi de données additionnelles en dehors des périodes de pointe, mise à jour de modules de logiciel, calcul de la fréquence de transmission de carrousel, retardement de la transmission de flux vidéo, génération de listes de reproduction*

AL N 21/266 . . . *Gestion de canal ou de contenu, p.ex. génération et gestion de clés et de messages de titres d'accès dans un système d'accès conditionnel, fusion d'un canal de monodiffusion de VOD dans un canal multidiffusion*

AL N 21/2662 . . . . *Contrôle de la complexité du flux vidéo, p.ex. en mettant à l'échelle la résolution ou le débit binaire du flux vidéo en fonction des capacités du client*

AL N 21/2665 . . . . *Rassemblement de contenus provenant de différentes sources, p.ex. Internet et satellite*

AL N 21/2668 . . . . *Création d'un canal pour un groupe dédié d'utilisateurs finaux, p.ex. en insérant des publicités ciblées dans un flux vidéo en fonction des profils des utilisateurs finaux*

AL N 21/27 . . *Applications pour utilisateurs finaux basées sur un serveur*

AL N 21/274 . . . *Stockage de contenu ou données additionnelles spécifiques aux utilisateurs finaux en réponse aux requêtes des utilisateurs finaux*

AL N 21/2743 . . . . *Hébergement vidéo de données téléchargées ~~vers l'amont~~à partir ~~du~~ du dispositif client*

AL N ***21/2747*** · · · · *Stockage à distance de programmes vidéo reçus via la voie descendante, p.ex. du serveur*

AL N ***21/278*** · · · *Base de données de descripteurs de contenu ou service de répertoire pour accès par les utilisateurs finaux*

AL N ***21/40*** · *Dispositifs clients ~~spécifiquement~~ spécialement adaptés ~~pour~~ à la réception de contenu ou à l'interaction avec le contenu, p.ex. boîtier décodeur [STB]; Leurs opérations*

AL N ***21/41*** · · *Structure de client; ~~s~~Structure de périphérique de client*

AL N ***21/414*** · · · *Plate~~-~~-formes spécialisées de client, p.ex. récepteur au sein d'une voiture~~,~~ ou intégré dans un appareil mobile*

AL N *21/4143* · · · · ***Ordinateur personnel [PC]***

AL N *21/4147* · · · · ***Enregistreur vidéo personnel [PVR] (H04N 5/76 a priorité)***

AL N ***21/418*** · · · *Carte externe destinée à être utilisée en combinaison avec le dispositif client, p.ex. pour l'accès conditionnel*

AL N *21/4185* · · · · ***pour le paiement (mécanismes actionnés par carte d'identité codée ou carte de crédit codée pour déclencher ou actionner des appareils de vente, de location, de distribution de pièces de monnaie ou de papier-monnaie, ou de remboursement G07F 7/08; schémas, architectures ou protocoles de paiement G06Q 20/00; commerce électronique G06Q 30/00)***

AL N *21/422* · · · ***Périphériques d'entrée uniquement, p.ex. système de positionnement global [GPS] (Dispositions d'entrée ou dispositions d'entrée et de sortie combinées pour l'interaction entre l'utilisateur et le calculateur G06F 3/01)***

AL N ***21/4223*** · · · · ***Caméras (H04N 5/225 a priorité)***

AL N ***21/4227*** · · · · *Entrée à distance par un utilisateur situé à distance du dispositif client, p.ex. au travail*

AL N ***21/426*** · · · ***Eléments internes de client (H04N 5/44 a priorité)***

AL N ***21/43*** · · *Traitement de contenu ou données additionnelles, p.ex. démultiplexage de données additionnelles d'un flux vidéo numérique; Opérations élémentaires de client, p.ex surveillance du réseau domestique~~,~~ ou synchronisation de l'horloge du décodeur; Intergiciel de client*

AL N ***21/431*** · · · *Génération d'interfaces visuelles; Rendu de contenu ou données additionnelles (circuits de réception pour visualisation d'information additionnelle H04N5/445)*

AL N ***21/432*** · · · *Opération de récupération de contenu d'un support de stockage local, p.ex. disque dur*

AL N ***21/433*** · · · *Opération de stockage de contenu, p.ex. opération de stockage en réponse à une requête de pause~~,~~ ou opérations de cache*

AL N ***21/4335*** · · · · *Opérations de gestion interne, ~~e.g~~p.ex.~~.~~ ~~priorisation~~ établissement de priorité de contenu pour l'effacement dû à des restrictions d'espace de stockage*

AL N ***21/434*** · · · *Désassemblage d'un flux multiplexé, p.ex. démultiplexage de flux audio et vidéo, extraction de données additionnelles d'un flux vidéo; R~~r~~emultiplexage de flux multiplexés; Extraction ou traitement de SI; Désassemblage d'un flux élémentaire ~~paquetisé~~ mis en paquet*

AL N 21/435 . . . *Traitement de données additionnelles, p.ex. décryptage de données additionnelles~~,~~ ou reconstruction de logiciel à partir de modules extraits du flux de transport*

AL N 21/436 . . . *Interfaçage d'un réseau de distribution local, p.ex. communication avec un autre STB~~, ou~~ à l'intérieur de la maison*

AL N 21/4363 . . . . *Adaptation du flux vidéo à un réseau local spécifique, p.ex. un réseau IEEE 1394 ou Bluetooth*

AL N 21/4367 . . . . *Etablissement d'une communication protégée entre le client et un dispositif périphérique ou une carte à puces (Dispositions pour les communications secrètes ou protégées H04L 9/00; Dispositions de sécurité pour protéger les calculateurs ou les systèmes de calculateurs contre une activité non autorisée G06F 21/00)*

AL N 21/437 . . . *Interfaçage de la voie montante du réseau de transmission, p.ex. pour transmettre des requêtes de client à un serveur VOD*

AL N 21/438 . . . *Interfaçage de la voie descendante du réseau de transmission provenant d'un serveur, p.ex. récupération de paquets MPEG d'un réseau IP*

AL N 21/4385 . . . . *Traitement de flux multiplexé, p.ex. décryptage de flux multiplexé*

AL N 21/439 . . . *Traitement de flux audio élémentaires*

AL N 21/44 . . . *Traitement de flux élémentaires vidéo, p.ex. raccordement d'un clip vidéo récupéré d'un stockage local avec un flux vidéo en entrée~~,~~ ou rendu de scènes selon des graphes de scène MPEG-4*

AL N 21/4402 . . . . *impliquant des opérations de reformatage de signaux vidéo pour la redistribution domestique, le stockage ou l'affichage en temps réel*

AL N 21/4405 . . . . *impliquant le décryptage de flux vidéo (dispositions pour les communications secrètes ou protégées H04L 9/00)*

AL N *21/4408* . . . . *impliquant le cryptage de flux vidéo, p.ex. re-cryptage d'un flux vidéo décrypté pour la redistribution dans un réseau domestique (dispositions pour les communications secrètes ou protégées H04L 9/00)*

Formatted: French France
Formatted: French France
Formatted: French France
Formatted: French France

AL N 21/441 . . . *Acquisition de l'identification d'un utilisateur final (authentification dans les réseaux de communication sans fil H04W 12/06)*

AL N *21/4415* . . . . ***utilisant les caractéristiques biométriques de l'utilisateur, p.ex. par reconnaissance de la voix ou balayage d'empreintes digitales (Méthodes ou dispositions pour la reconnaissance de formes G06K 9/00)***

AL N 21/442 . . . *Surveillance de procédés ou de ressources, p.ex. détection de la défaillance d'un dispositif d'enregistrement, surveillance de la bande passante sur la voie descendante, du nombre de visualisations d'un film, de l'espace de stockage disponible dans le disque dur interne*

AL N 21/4425 . . . . *Surveillance d'erreurs de traitement du~~au niveau~~ client ou de défaillance matérielle (surveillance dans le traitement électrique de données numériques G06F 11/00)*

AL N 21/443 . . . *Procédés de système d'exploitation, p.ex. démarrage d'un boîtier décodeur STB, implémentation d'une machine virtuelle Java dans un boîtier décodeur STB, gestion d'énergie dans un boîtier décodeur STB (dispositions pour le chargement ou le lancement de programme G06F 9/445)*

AL N 21/45 · · *Opérations de gestion réalisées par le client pour faciliter la réception de contenu ou l'interaction avec le contenu, ou pour l'administration des données liées à l'utilisateur final ou au dispositif client lui-même, p.ex. apprentissage des préférences d'utilisateurs pour ~~recommender~~recommander des films~~,~~ ou résolution de conflits d'ordonnancement*

AL N 21/454 · · · *Filtrage de contenu, p.ex. blocage des publicités*

AL N 21/4545 · · · · *Signaux d'entrée aux algorithmes de filtrage, p.ex. filtrage d'une région de l'image*

AL N 21/458 · · · *Ordonnancement de contenu pour créer un flux personnalisé, p.ex. en combinant une publicité stockée localement avec un flux ~~en~~ d'-entrée; Opérations de mise à jour, p.ex. pour modules de système d'exploitation*

AL N 21/462 · · · *Gestion de contenu ou de données additionnelles, p.ex. création d'un guide de programmes électronique~~s~~ maître à partir de données reçues par internet et d'une tête de réseau~~,~~ ou contrôle de la complexité d'un flux vidéo en ~~mettant à l'échelle~~dimensionnant la résolution ou le débit en fonction des capacités du client*

AL N 21/4623 · · · · *Traitement de messages de titres d'accès, p.ex. message de contrôle d'accès [ECM], message de gestion d'accès [EMM]*

AL N *21/4627* · · · · ***Gestion de droits***

AL N 21/466 · · · *Procédé d'apprentissage pour la gestion intelligente, p.ex. apprentissage des préférences d'utilisateurs pour ~~recommender~~recommander des films*

AL N *21/47* · · ***Applications pour utilisateurs finaux (Techniques d'interaction pour les interfaces utilisateur graphiques G06F 3/048; circuits de réception pour visualisation d'information additionnelle H04N 5/445)***

AL N 21/472 · · · *Interface pour utilisateurs finaux pour la requête de contenu, de données additionnelles ou de services; Interface pour utilisateurs finaux pour l'interaction avec le contenu, p.ex. pour la réservation de contenu ou la ~~définition~~ mise en place de rappels, pour la requête de notification d'évènement ~~,~~ ou pour la manipulation de contenus affichés~~u~~*

AL N 21/4722 · · · · *pour la requête de données additionnelles associées au contenu*

AL N 21/4725 · · · · · *utilisant des régions interactives de l'image, p.ex. zones ~~actives~~ actives~~sensibles~~ ('hot spots')*

AL N 21/4728 · · · · *pour la sélection d'une région d'intérêt [ROI], p.ex. pour la requête d'une version de plus haute résolution ~~de la~~d'une région sélectionnée*

AL N 21/475 · · · *Interface pour utilisateurs finaux pour ~~saisir~~ acqu~~i~~érir des données d'utilisateurs finaux, p.ex. numéro d'identification personnel [PIN~~],~~] ou données de préférences*

AL N 21/478 · · · *Services additionnels, p.ex. affichage de l'identification d'un appelant téléphonique~~,~~ ou application d'achat*

AL N *21/4782* · · · · ***Navigation sur le Web***

AL N *21/4784* · · · · ***réception de récompenses (schémas, architectures ou protocoles de paiement G06Q 20/00; commerce électronique G06Q 30/00)***

AL N *21/4786* · · · · *communication par messages électroniques~~e-mail~~*

Formatted: French France

Formatted: French France

AL N *21/4788* · · · · ***communication avec d'autres utilisateurs, p.ex. discussion en ligne***

AL N ***21/482*** · · · *Interface pour utilisateurs finaux pour la sélection de programmes*

AL N ***21/485*** · · · ***Interface pour utilisateurs finaux pour la configuration du client***

AL N ***21/488*** · · · ***Services de données, p.ex. téléscripteur d'actualités***

AL N ***21/60*** · ***Structure du réseau ou procédés pour la distribution de vidéo entre le serveur et le client ou entre des clients distants (réseaux de données à commutation H04L 12/00; réseaux de télécommunications sans fil H04W) ; Signalisation de contrôle entre clients, serveur et éléments du réseau; Transmission de données de gestion entre serveur et client; Détails de la communication entre serveur et client***

AL N ***21/61*** · · ***Structure physique de réseau; Traitement de signal (H04B a priorité)***

AL N ***21/63*** · · ***Signalisation de contrôle entre des éléments du client, serveur et réseau; Procédés liés au réseau pour la distribution de vidéo entre serveur et clients, p.ex. transmission de la couche de base et des couches d'amélioration sur des voies de transmission différentes, mise en œuvre d'une communication pair à pair via internet entre des boîtiers ~~récepteurs~~ décodeurs STB; Protocoles de communication; Adressage***

AL N ***21/633*** · · · ***Signaux de commande issus du serveur dirigés vers des éléments du réseau ou du client***

AL N ***21/6332*** · · · · ***vers le client***

AL N ***21/6334*** · · · · · ***pour l'autorisation, p.ex. en transmettant une clé (dispositions pour les communications secrètes ou protégées H04L 9/00)***

AL N ***21/6336*** · · · · · ***vers le décodeur***

AL N ***21/6338*** · · · · ***vers le réseau***

AL N *21/637* · · · ***Signaux de commande émis par le client et dirigés vers les éléments du serveur ou du réseau***

AL N *21/6371* · · · · ***vers le réseau***

AL N *21/6373* · · · · ***pour le contrôle du débit***

AL N *21/6375* · · · · ***pour demander une retransmission***

AL N *21/6377* · · · · ***vers le serveur***

AL N *21/6379* · · · · · ***vers le codeur***

AL N *21/64* · · · ***Adressage***

AL N *21/6402* · · · · ***Allocation d'adresses pour des clients***

AL N *21/6405* · · · · ***Multidiffusion***

AL N *21/6408* · · · · ***Monodiffusion***

AL N *21/643* · · · ***Protocoles de communication***

AL N *21/6433* · · · · *~~Digital Storage Media - Command and Control Protocol~~ Protocole de commande et de contrôle de support de stockage numérique [DSM-CC]*

Formatted: French France

Formatted: French France

Formatted: French France

AL N *21/6437* · · · · ***Protocole de ~~transport~~ transmission en temps réel [RTP]***

AL N *21/647* · · · ***Signalisation de contrôle entre des éléments du réseau et serveur ou clients ;Procédés~~essus~~ réseau pour la dis~~e~~tribution vidéo entre serveur et clients,~~,~~ p.ex. contrôle de la qualité du flux vidéo en éliminant des paquets, protection du contenu contre une modification non autorisée dans le réseau, surveillance de la charge du réseau~~,~~ ou réalisation d'une passerelle entre deux réseaux différents, p.ex. entre réseau IP et réseau sans fil***

AL N *21/65* · · ***Transmission de données de gestion entre le client et le serveur***

AL N *21/654* · · · ***Transmission du serveur vers le client***

AL N *21/6543* · · · · ***pour forcer certaines opérations ~~au~~ du client, p.ex. l´enregistrement***

AL N *21/6547* · · · · ***comprenant des paramètres, p.ex. pour l'initialisation du client***

AL N *21/658* · · · ***Transmission du client vers le serveur***

AL N *21/6583* · · · · ***~~Accusation~~ Accusé de réception***

AL N *21/6587* · · · · ***Paramètres de contrôle, p.ex. commande de lecture à vitesse variable (´trick play´) ou~~,~~ sélection d'un point de vue***

AL N *21/80* · ***Génération ou traitement de contenu ou de données additionnelles par un créateur de contenu, indépendamment du processus de distribution; Contenu ~~per se~~en soi***

AL N *21/81* · · ***Composants mono média du contenu***

AL N *21/83* · · ***Génération ou traitement de données de protection ou de description associées au contenu ; Structuration du contenu***

AL N *21/835* · · · ***Génération de données de protection, p.ex. certificats***

AL N *21/8352* · · · · ***impliquant des donnés d'identification du contenu ou de la source, p. ex. ´identificateur unique de matériel~~Unique Material Identifier´~~ [UMID]***

AL N *21/8355* · · · · ***impliquant des données sur l'utilisation, p.ex. nombre de copies ou de visualisations autorisées***

AL N *21/8358* · · · · ***impliquant des filigranes numériques***

AL N *21/84* · · · ***Génération ou traitement de données de description, p. ex. descripteurs de contenu***

AL N *21/8405* · · · · ***~~R~~représentés par des mots clés***

AL N *21/845* · · · ***Structuration du contenu, p. ex. décomposition du contenu en segments temporels***

AL N *21/85* · · ***Assemblage du contenu;~~, g~~Génération d'applications multimédia***

AL N *21/854* · · · ***Création de contenu***

AL N *21/8541* · · · · ***~~I~~impliquant des embranchements, p. ex. vers des fins d'histoire différentes***

AL N *21/8543* · · · · ***u~~U~~tilisant un langage de description, p. ex. Groupe expert en codage d'information multimedia et hypermedia~~norme MHEG~~ [~~´~~MHEG~~ultimedia and Hypermedia information coding Expert Group~~], ~~´[MHEG], ´eXtensible Markup Language~~langage de balisage extensible´ [XML]***

AL N *21/8545* · · · · ***pour générer des applications interactives***

AL N *21/8547* · · · · ***~~I~~impliquant des marquages temporels pour synchroniser le contenu***

Formatted: French France
Formatted: French France
Formatted: French France
Formatted: French France
Formatted: French France

AL **N** ***21/8549*** · · · · ***Création de résumés vidéo p. ex. bande annonce***

AL **N** ***21/858*** · · · ***Création de liens entre données et contenu, p. ex. en liant un URL à un objet vidéo en créant une zone ~~active~~ active ~~sensible~~('hotspot')***

IPC/A 019
ORIGINAL: English/French
DATE: 25.11.2009

WORLD INTELLECTUAL PROPERTY ORGANIZATION
ORGANISATION MONDIALE DE LA PROPRIÉTÉ INTELLECTUELLE

GENEVA/GENÈVE

COMMITTEE OF EXPERTS OF THE IPC UNION
COMITÉ D'EXPERTS DE L'UNION DE L'IPC

AL REVISION PROJECT FILE
DOSSIER DE PROJET RÉVISION NIVEAU ÉLEVÉ

PROPOSAL BY : **EP** **PROPOSITION DE :**	**IPC AREA:** **G06F 19/10** **DOMAINE DE LA CIB :**
RAPPORTEUR : **EP**	**TECHNICAL FIELD :** **E** **DOMAINE TECHNIQUE :**

ANNEX/ ANNEXE	CONTENT/CONTENU		ORIGIN/ ORIGINE	DATE
1	Decision of the subcommittee	Décision du cous-comité	IB	27.10.2008
2	Proposal - scheme	Proposition - schéma	EP	16.01.2009
3	Comments	Observations	FR	30.01.2009
4	Comments	Observations	DE	09.02.2009
5	Proposal - definitions	Proposition - définitions	EP	17.02.2009
6	Rapporteur summary for next ALS		EP	17.02.2009
7	Decision of the subcommittee	Décision du cous-comité	IB	24.03.2009
8	Comments	Observations	DE	30.04.2009
9	Comments	Observations	US	30.04.2009
10	Working Group decision	Décision du groupe de travail	IB	03.08.2009
11	Comments	Observations	JP	28.08.2009
12	List of cross references	Liste des renvois	IB	31.08.2009
13	Proposal - RCL	Proposition - RCL	EP	02.09.2009
14	Comments	Observations	EP	02.09.2009
15	French version	Version française	IB	16.09.2009
16	Comments	Observations	DE	28.09.2009
17	Rapporteur report	Rapport du rapporteur	EP	11.11.2009

ANNEX/ ANNEXE	CONTENT/CONTENU		ORIGIN/ ORIGINE	DATE
18	Proposal - definitions	Proposition - définitions	EP	11.11.2009
19	Comments	Observations	FR	24.11.2009

Title - G06F19/10

Bioinformatics

Definition statement

This main group covers:

- methods and systems for genetic or protein-related data processing in computational molecular biology
- bioinformatics methods or systems where the digital data processing is not explicitly mentioned
- in this main group, "systems" include apparatus

Special rules of classification within this main group

In this main group, at each hierarchical level, in the absence of an indication to the contrary, classification is made in the first appropriate place.

Informative references

Attention is drawn to the following places, which may be of interest for search:

In silico methods of creating virtual chemical libraries	C40B50/02
In silico methods of screening virtual chemical libraries	C40B30/02
Medical diagnosis	A61B5/00
Macromolecular X-ray crystallographic or NMR structures per se	C07K14/00-C07K14/825
Sequencing using PCR	C12Q1/68
Sequencing using electrophoresis	G01N27/447
Sequencing using chromatography	G01N30/00-G01N30/96
Sequencing using mass spectrometry	G01N33/68
Genetic engineering involving nucleic acids	C12N15/00-C12N15/90
PCR apparatus per se	B01L7/00
Mass spectrometry apparatus per se	H01J49/00-H01J49/20
Gel electrophoresis apparatus per se	G01N27/447
Manufacture of microarrays, DNA chips	B01J19/00
Chemical reactions involving the use of microarrays, DNA chips	C12Q1/68
Finding positions and orientations in microarray images by image processing	G06T7/00

Neural networks per se	G06N3/02
Expert systems per se	G06N5/02
Probabilistic networks per se	G06N7/00
Pattern recognition	G06K9/00
Input/Output devices	G06F3/14
Information retrieval, databases per se	G06F17/30
Computing architectures and program control	G06F9/00-G06F9/46

Title - G06F19/12

For modelling or simulation in systems biology

Definition statement

This subgroup covers:

Documents involving simulation and mathematical modelling of relationships and interactions between molecular entities on a subcellular level, integrating genetic and/or protein-related data to describe the dynamic behaviour of protein-protein/protein-ligand interactions, regulatory or metabolic networks. Mere mention of modelling or simulation is not sufficient to classify in this subgroup. In such cases, see lower subgroups.

Title - G06F 19/14

For phylogeny or evolution

This subgroup covers:

Documents involving analysis of orthologous, paralogous, syntenic, and/or taxonomic relationships. This subgroup also covers the generation of pedigrees and phylogenetic trees.
Mere mention of evolutionary data is not sufficient to classify in this subgroup. In such cases, see lower subgroups.

Title - G06F 19/16

For molecular structure

This subgroup covers:

Documents involving the structural architecture of proteins, peptides, amino acids and nucleic acids and the prediction thereof. The covered processes include structural alignment, protein folding, domain topology, molecular modelling, receptor-ligand modeling, docking methods. Structural and functional relationships of the entities are covered. The types of structure include secondary, tertiary, quaternary, as well as two and three dimensional prediction and/or analysis. Mere mention of structural data is not sufficient to classify in this subgroup. In such cases, see lower subgroups.

Title - G06F19/18

For functional genomics or proteomics

This subgroup covers:

Documents involving assessing the function of genes, and proteins in determining traits, physiology and/or development of an organism, making use of computational and large scale, high-throughput technologies. This subgroup includes documents involving genotypic-phenotypic associations. This includes genotyping and genome annotation, linkage disequilibrium analysis and association studies, population genetics, alternative splicing and Short Interfering RNA design (siRNA, RNAi). This subgroup also covers binding site identification, mutagenesis analysis, protein-protein or protein-nucleic acid interactions. Mere mention of genetic or protein function is not sufficient to classify in this subgroup. In such cases, see lower subgroups.

Title - G06F19/20

For hybridisation or gene expression

This subgroup covers:

Documents involving analysis of gene expression information. The covered technology includes microarray analysis, gel electrophoresis analysis, and sequencing by hybridisation. Further technologies include probe design and probe optimisation, microarray normalisation, expression profiling, noise correction models, expression ratio estimation. This subgroup does not cover base calling or sequencing methods *per se*. Mere mention of hydridisation or gene expression is not sufficient to classify in this subgroup. In such cases, see lower subgroups.

Title - G06F19/22

For sequence comparison

This subgroup covers:

Documents involving comparing sequence information, wherein the sequences are nucleic acids or amino acids. The comparisons include methods of alignment, homology identification, motif identification, SNP discovery, haplotype identification, fragment assembly, gene finding. Mere mention of sequence data is not sufficient to classify in this subgroup. In such cases, see lower subgroups.

Title - G06F19/24

For machine learning, data mining or biostatistics

This subgroup covers:

Documents involving discovery and analysis of patterns within a vast amount of genetic or protein-related data, wherein the emphasis is placed on the method of analysis and is largely independent of the type of bioinformatic data. Covered methods include bioinformatic pattern finding, knowledge discovery, rule extraction, correlation, clustering and classification. Also includes multivariate analysis of protein or gene-related data [*e.g.* analysis of variances (ANOVA), principal component analysis (PCA), support vector machines (SVM)].

Title - G06F19/26

For data visualisation

This subgroup covers:

Documents involving visual representations specifically adapted to bioinformatic data, wherein the emphasis is placed on the method of visualisation and is largely independent of the type of bioinformatic data. Visualisation of bioinformatic data specifically inlcudes graphics generation, map and network display, etc.

Title - G06F19/28

For programming tools or database systems

This subgroup covers:

Documents involving computer software specifically adapted to assist programming procedures within bioinformatics and database systems specifically adapted for managing bioinformatic data. This includes ontologies, heterogeneous data integration, data warehousing, computing architectures.

Glossary

Note: Glossary definitions are formulated in the context of bioinformatics. Methods and calculation processes are carried out using computer programs.

G06F19/12

Systems biology	simulation and mathematical modelling of relationships and interactions between molecular entities in subcellular systems integrating genetic and/or protein-related data to describe the dynamic behaviour of protein-protein/protein-ligand interactions, regulatory or metabolic networks, etc.

G06F19/14

Phylogeny	reconstruction of an evolutionary development and history of a species or higher taxonomic grouping of organisms; typically represented as a phylogenetic tree; methods for creating phylogenetic trees
Phylogenetic tree	tree-like graphical representation of phylogenetic relationships
Pedigree	a family tree describing the occurrence of heritable traits across generations
Taxonomy	classification of organisms to show their evolutionary relationships to other organisms
Paralogue	a homologous sequence in the same organism derived from gene duplication
Orthologue	a homologous sequence found in different species and derived from a common ancestor
Syntenic regions	corresponding regions in a species to a observed grouping of genes in the same order and on the same chromosome in another species

G06F19/16

Molecular structure	2-dimensional or 3-dimensional arrangement of atoms, groups of atoms or domains in nucleic aids, proteins, peptides and amino acids
Structure alignment	form of alignment to establish structural and functional equivalences between two or more proteins based their secondary or tertiary structure
Protein folding	process by which a polypeptide chain folds into a specific three-dimensional structure

Domain	a domain of a protein is an element of the overall molecular structure that is self-stabilising and often folds independently of the rest of the polypeptide chain
Drug targeting	drug design strategy aiming at optimising the properties of a medicinal compound, based on the three dimensional structure of the target, for delivery to a particular tissue or organ in the body
G06F19/18	
Functional genomics	experimental analyses aiming at assessing the function of genes in determining traits, physiology and/or development of an organism, making use of computational and high-throughput technologies
Proteomics	large-scale study of the functions of proteins and their interactions with other molecular entities in a biological system
Genotyping	analysis of the particular genetic variations existing in a DNA sample
Genome annotation	allocation of functions to individual genes in the genome
G06F19/20	
Gene expression	process by which proteins are made or transcribed from the instructions encoded in DNA
Sequencing by hybridisation	sequencing by hybridisation is a DNA sequencing technique in which an array of short sequences of nucleotides is brought in contact with a solution of the target DNA sequence. A biochemical method determines the subset of probes that bind to the target sequence and a combinatorial method is used to reconstruct the DNA sequence from the spectrum
Gene expression profiling	determination of the pattern of genes expressed, i.e., transcribed, under specific circumstances or in a specific cell
Probe design and optimisation for microarrays	designing and selecting (i) optimal, highly specific probes, e.g., oligonucleotides, cDNA, fragments for hybridization experiments with microarrays and (ii) optimal sets of probes, e.g., oligonucleotides, cDNA, to be chemically attached to a solid support to form an array
microarray	many nucleic acid probes attached to a substrate, which form an ordered pattern
Noise correction model	model that accounts for non-signal data, such as for microarrays: optical noise, quality control problems and cross hybridization
G06F19/22	

Sequence comparison	process of comparing nucleic or amino acid sequences, generally by a linear alignment in such a way that equivalent positions in adjacent sequences are brought into the correct alignment with each other by introducing insertions in suitable positions, in order to identify similarities and/or differences amongst the compared sequences
Homology	an indication of the amount of similarity between two sequences. Homology determinations can include allowance for gaps, insertions, deletions and mismatches between the aligned sequences.
Motif	sequence motif is a specific nucleotide or amino acid sequence pattern
SNP	Single Nucleotide Polymorphism: a DNA sequence variation that involves a change in a single nucleotide and is commonly present in a part of a population
Haplotype	a set of one or more polymorphisms (sequence variations) that may be found at a particular genetic location on the same chromosome
Fragment assembly	a method by which linear portions of sequence information are assembled to obtain full length gene sequence data.
Gene finding	a method of searching genomic DNA sequences to identify open reading frames which encode proteins.
G06F19/24	
Data mining	discovery and analyses of patterns within a vast amount of genetic or protein-related data
G06F19/26	
Data visualisation	generation and/or display of graphical representations of genetic and protein-related data
G06F19/28	
Programming tools or database systems	computer software to assist programming procedures within bioinformatics and database systems for managing genetic/ protein-related data
Ontology	a classification methodology for formalizing a subject's knowledge in a structured and controlled vocabulary

EXCERPT FROM DOCUMENT IPC/WG/21/2
EXTRAIT DU DOCUMENT IPC/WG/21/2

REPORT ON THE SEVENTH SESSION OF THE IPC ADVANCED LEVEL SUBCOMMITTEE

17. Since the seventh session of the ALS was the final one, all pending A projects were included in the program of the Working Group. From now on, A projects will designate revision projects originating from the IP5 Offices and C projects will designate revision projects that would be included in the IPC revision program by the Committee. For practical reasons, the schemes adopted by the ALS in the framework of projects A 012, A 013, A 014, A 017, A 018 and A 020 were included in the Technical Annexes of this session (see Technical Annexes 1 to 7 and 9 to this report).

IPC REVISION PROGRAM

General

25. The Working Group noted the decision by the Committee of Experts at its forty-first session that revision projects, including advanced level revision projects, would be considered by the Working Group and forwarded to the Committee for final adoption after completion. It was noted that projects originating from the Trilateral or the IP5 Offices cooperation will be designated by the letter “A” and revision projects included in the IPC revision program by the Committee will be designated by the letter “C” (see paragraph 17, above).

26. Discussions were based on compilations of the relevant revision project files. The Working Group considered nine pending C projects, plus 17 A projects forwarded from the former ALS, and approved amendments relating to those projects (see Technical Annexes 1 to 29 to this report relating to revision projects). The status of those projects and the list of future actions and deadlines are indicated in Annex III to this report.

IPC Revision Projects

27. The Working Group made the following observations with respect to the IPC revision projects. All references to annexes in this paragraph refer to annexes of the corresponding project file, unless otherwise stated.

Project A 019 (electrical) – The English version of Annex 2 was approved with some amendments (see Technical Annex 8E to this report).

Comments were invited on:

– whether an additional Note after subgroup G06F 19/10 was needed in order to indicate that purely chemical methods are excluded from this subgroup; and

– whether the phrasing of examples in the title of subgroup G06F 19/16 was appropriate.

Further comments were invited on the definitions of Annex 5, to be followed by a revised rapporteur proposal. The Rapporteur was also invited to prepare a RCL, and the International Bureau was requested to provide a French version and a CRL.

RAPPORT SUR LA SEPTIÈME SESSION DU SOUS-COMITÉ CHARGÉ DU NIVEAU ÉLEVÉ DE LA CIB

17. Étant donné que la septième session de l'ALS était la dernière, tous les projets A en instance ont été inscrits au programme du groupe du travail. Dorénavant, les projets A désigneront les projets de révision émanant des offices de l'IP5 et les projets C désigneront les projets de révision qui seront inscrits au programme de révision de la CIB par le comité. Pour des raisons pratiques, les schémas adoptés par l'ALS dans le cadre des projets A 012, A 013, A 014, A 017, A 018 et A 020 ont été inclus dans les annexes techniques du rapport sur la session en cours (voir les annexes techniques 1 à 7 et 9 du présent rapport).

PROGRAMME DE RÉVISION DE LA CIB

Généralités

25. Le groupe de travail a pris note de la décision prise par le comité d'experts à sa quarante et unième session selon laquelle les projets de révision, y compris ceux relatifs au niveau élevé, seront examinés par le groupe de travail et transmis au comité pour adoption définitive une fois achevés. Il a été pris note du fait que les projets émanant des offices de la coopération trilatérale ou de l'IP5 seraient désignés par la lettre "A" et que les projets de révision inscrits au programme de révision de la CIB par le comité seraient désignés par la lettre "C" (voir le paragraphe 17).

26. Les délibérations ont eu lieu sur la base de synthèses des dossiers de projet correspondants. Le groupe de travail a examiné neuf projets C en instance ainsi que 17 projets A transmis par l'ancien ALS et a approuvé les modifications relatives à ces projets (voir les annexes techniques 1 à 29 du présent rapport relatives aux projets de révision). L'état d'avancement de ces projets et la liste des mesures à prendre et des délais correspondants font l'objet de l'annexe III du présent rapport.

Projets de révision de la CIB

27. Le groupe de travail a formulé les observations ci-après concernant les projets de révision de la CIB. Dans le présent paragraphe, tout renvoi à des annexes désigne, sauf indication contraire, les annexes du dossier de projet correspondant.

Projet A 019 (électricité) – La version anglaise figurant à l'annexe 2 a été approuvée sous réserve de certaines modifications (voir l'annexe technique 8E du présent rapport).

Des observations ont été demandées

– sur le point de savoir si une note supplémentaire suivant le sous-groupe G06F 19/10 était nécessaire pour indiquer que les méthodes purement chimiques sont exclues de ce sous-groupe et

– sur le point de savoir si le libellé des exemples figurant dans le titre du sous-groupe G06F 19/16 était approprié.

Des observations supplémentaires ont été demandées sur les définitions figurant à l'annexe 5, en vue de l'établissement d'une proposition révisée du rapporteur. Le rapporteur a également été invité à établir une table de concordance et le Bureau international a été prié d'établir une version française ainsi qu'une table des renvois croisés.

ANNEX 8E G06F [Project-Rapporteur : A019/EP <WG21>]

CL C ***19/00 Digital computing or data processing equipment or methods, specially adapted for specific applications (G06F 17/00****takes precedence; data processing systems or methods specially adapted for administrative, commercial, financial, managerial, supervisory or forecasting purposes* ***G06Q****)*

AL N *19/10* · *Bioinformatics, i.e. methods or systems for genetic or protein-related data processing in computational molecular biology (in silico methods of screening virtual chemical libraries **C40B 30/02**; in silico or mathematical methods of creating virtual chemical libraries **C40B 50/02**)*

1. AL N *Note*
   19/10 This group also covers bioinformatics methods or systems where digital data processing is inherent or explicit, but not explicitly mentioned. **[new.]**
2. In this group, the following term is used with the meaning indicated:
   - *"systems" include apparatus.* **[new.]**
3. *In this group, at each hierarchical level, in the absence of an indication to the contrary, classification is made in the first appropriate place.* **[new.]**

AL N *19/12* · · *for modelling or simulation in systems biology, e.g. probabilistic or dynamic models, gene-regulatory networks, protein interaction networks or metabolic networks*

AL N *19/14* · · *for phylogeny or evolution, e.g. evolutionarily conserved regions determination or phylogenetic tree construction*

AL N *19/16* · · *for molecular structure, e.g. structure alignment, structural or functional relations, protein folding, domain topologies, drug targeting using structure data, involving two-dimensional or three-dimensional structures*

AL N *19/18* · · *for functional genomics or proteomics, e.g. genotype-phenotype associations, binding site identification, mutagenesis, genotyping or genome annotation, protein-protein interactions or protein-nucleic acid interactions*

AL N *19/20* · · *for hybridisation or gene expression, e.g. microarrays, sequencing by hybridisation, normalisation, profiling, noise correction models, expression ratio estimation, probe design or probe optimisation*

AL N *19/22* · · *for sequence comparison involving nucleotides or amino acids, e.g. homology search, motif or SNP [Single-Nucleotide Polymorphism] discovery or sequence alignment*

AL N *19/24* · · *for machine learning, data mining or biostatistics, e.g. pattern finding, knowledge discovery, rule extraction, correlation, clustering or classification*

AL N *19/26* · · *for data visualisation, e.g. graphics generation, display of maps or networks or other visual representations*

AL N *19/28* · · *for programming tools or database systems, e.g. ontologies, heterogeneous data integration, data warehousing or computing architectures*

JAPAN PATENT OFFICE August 28, 2009

Project: A019 (Bioinformatics) Subclass: G06F

JP Comment

Ref: Annex 10, Working Group decision, 03-AUG-2009
Annex 5, Proposal - definitions, 17-FEB-2009

With regard to the revision project A019, JP thanks IB for having posted an excerpt covering the decision in the latest Working Group meeting (IPC/WG/21/2, Para. 27). JP notes that some comments were invited and would like to respond as follows.

1. Note after the title of G06F 19/10

As to the question of where to classify the subject matters of "purely chemical methods" that are excluded from this subgroup, JP believes that EP Rapporteur has kindly provided detailed and ample information in the proposal-definitions in Annex 5, wherein a number of carefully selected groups in Section C or Subclass G01N were listed in its "Informative references" section.

Thus, since the information in question can be given in the definitions, JP would not believe it necessary to enter an additional Note after the title of G06F 19/10.

2. Examples in the title of G06F 19/16

It is JP's understanding that the phrase of "involving two-dimensional or three-dimensional structures" at the end of the title is qualifying "molecular structure" at the top of the title as well as every item listed in the "e.g."

The appropriateness of such phrasing or wording would better be judged by EP Rapporteur or other offices who are more familiar with the English language.

JP also understands that this group corresponds to the already-entered ECLA group of "G06F 19/00 C2."

[END]

WORLD INTELLECTUAL PROPERTY ORGANIZATION	
IPC REVISION WORKING GROUP	
Project: **A 019:** G06F List of cross references	Date: June, 2009

References affected by revision project A019 (G06F)

C-mod. existing group	Ref to this group	Comment
G06F 19/00	A63F & G06F Subclass Index	No action needed

Principal Directorate Patent Grant Automation - Directorate Classification		
Project: **A019**	Subject: **Bioinformatics**	IPC range: **G06F 19**
Proposal - RCL (Revision Concordance List)		31 August 2009

RCL

	from	**to**
	G06F 19/00	G06F 19/10 - 19/28

Principal Directorate Patent Grant Automation - Directorate Classification		
Project: **A019**	Subject: **Bioinformatics**	IPC range: **G06F 19**
Comments		31 August 2009

At the latest June WG meeting a scheme was approved (A.11 of project file) and comments were invited on:

1. whether an additional Note after subgroup G06F 19/10 was needed in order to indicate that purely chemical methods are excluded from this subgroup; and
2. whether the phrasing of examples in the title of subgroup G06F 19/16 was appropriate.

The EPO position is that:

1. a Note after G06F 19/10 is unnecessary as purely-chemical methods would not fit under G06F at all. Any useful informative references relevant for search and pointing to chemical places would be listed in the Definition layer.

   We also spotted a typo mistake in the approved Notes:

   Notes

   1. This group also covers bioinformatics methods or systems where digital data processing is inherent or ***~~explicit~~****, but not explicitly mentioned.*

   should read --- ***implicit*** ---

2. the title of group 19/16 is appropriate as approved.
3. unrelated to questions 1. & 2. above, it is suggested to add two examples to the title of group 19/18, to comply with a specific request from US (item 3. of A.9):

   19/18 for functional genomics or proteomics, e.g. genotype-phenotype associations, ***linkage disequilibrium, population genetics****, binding site identification* ---

Roberto Iasevoli
Peter Swarén
Przemyslaw Godzina

ANNEXE 1E,F	**G06F**	**[Projet-Rapporteur : A019/EP]**	**<WG21>**
EN: approve CL , C	***19/00***	***Digital computing or data processing equipment or methods, specially adapted for specific applications*** *(**G06F 17/00**takes precedence; data processing systems or methods specially adapted for administrative, commercial, financial, managerial, supervisory or forecasting purposes **G06Q**)*	***Equipement ou méthodes de traitement de données ou de calcul numérique, spécialement adaptés à des applications spécifiques*** *(**G06F 17/00** a priorité; systèmes ou méthodes de **traitement** de données, spécialement adaptés à des fins administratives, commerciales, financières, de gestion, de surveillance ou de prévision **G06Q**)*
EN: approve AL , N	*19/10*	· *Bioinformatics, i.e. methods or systems for genetic or protein-related data processing in computational molecular biology (in silico methods of screening virtual chemical libraries **C40B 30/02**; in silico or mathematical methods of creating virtual chemical libraries **C40B 50/02**)*	*Bio-informatique, p.ex. méthodes ou systèmes pour le traitement de données génétiques ou se rapportant aux protéines en biologie moléculaire computationnelle (méthodes de criblage par ordinateur (in silicio) de bibliothèques chimiques virtuelles **C40B 30/02**; méthodes de création mathématiques ou par ordinateur (in silicio) de bibliothèques chimiques virtuelles **C40B 50/02**)*
EN: questionWithApproval AL , N	*Note 19/10*	1. *This group also covers bioinformatics methods or systems where digital data processing is inherent or explicit, but not explicitly mentioned.* **[new.]** 2. In this group, the following term is used with the meaning indicated: • *"systems" include apparatus.* **[new.]** 3. *In this group, at each hierarchical level, in the absence of an indication to the contrary, classification is made in the first appropriate place.* **[new.]**	*Le présent groupe couvre également les méthodes ou les systèmes de bio-informatique dans lesquels le traitement des données numériques est inhérent ou explicite, mais non mentionné explicitement.* Dans le présent groupe, l'expression suivante a la signification ci-dessous indiquée: *"systèmes" comprend les appareils.* *Dans le présent groupe, à chaque niveau hiérarchique, sauf indication contraire, le classement s'effectue à la première place appropriée.*
EN: approve AL , N	*19/12*	· · *for modelling or simulation in systems biology, e.g. probabilistic or dynamic models, gene-regulatory networks, protein interaction networks or metabolic networks*	*pour la modélisation ou la simulation en biologie des appareils anatomiques, p.ex. modèles probabilistes ou dynamiques, réseaux régulateurs de gènes, réseaux d'interaction protéique ou réseaux métaboliques*
EN: approve AL , N	*19/14*	· · *for phylogeny or evolution, e.g. evolutionarily conserved regions determination or phylogenetic tree construction*	*pour la phylogénie ou l'évolution, p.ex. détermination de régions conservées sur le plan évolutionniste ou établissement d'un arbre phylogénique*

EN: questionWithApproval AL , N	*19/16*	· · *for molecular structure, e.g. structure alignment, structural or functional relations, protein folding, domain topologies, drug targeting using structure data, involving two-dimensional or three-dimensional structures*	*pour la structure moléculaire, p.ex. alignement de la structure, relations structurales ou fonctionnelles, repliement protéique, topologies de domaine, ciblage de médicaments utilisant des données de structure, impliquant des structures bidimensionnelles ou tridimensionnelles*
EN: approve AL , N	*19/18*	· · *for functional genomics or proteomics, e.g. genotype-phenotype associations, binding site identification, mutagenesis, genotyping or genome annotation, protein-protein interactions or protein-nucleic acid interactions*	*pour la génomique ou la protéomique fonctionnelle, p.ex. associations génotype-phénotype, identification des sites de liaison, mutagénèse, génotypage ou annotation génomique, interactions protéines-protéines ou interactions protéines-acides nucléiques*
EN: approve AL , N	*19/20*	· · *for hybridisation or gene expression, e.g. microarrays, sequencing by hybridisation, normalisation, profiling, noise correction models, expression ratio estimation, probe design or probe optimisation*	*pour l'hybridation ou l'expression génique, p.ex. microréseaux, séquençage par hybridation, normalisation, profilage, modèles de correction de bruit, estimation du ratio d'expression, conception ou optimisation de la sonde*
EN: approve AL , N	*19/22*	· · *for sequence comparison involving nucleotides or amino acids, e.g. homology search, motif or SNP [Single-Nucleotide Polymorphism] discovery or sequence alignment*	*pour la comparaison de séquences impliquant des nucléotides ou des acides aminés, p.ex. recherche d'homologie, extraction de motifs ou de SNP (polymorphismes de nucléotides simples) ou alignement de séquences*
EN: approve AL , N	*19/24*	· · *for machine learning, data mining or biostatistics, e.g. pattern finding, knowledge discovery, rule extraction, correlation, clustering or classification*	*pour l'apprentissage machine, l'exploration de données ou la bio statistique, p.ex. détection de formes, extraction de connaissances, extraction de règles, corrélation, agrégation ou classification*
EN: approve AL , N	*19/26*	· · *for data visualisation, e.g. graphics generation, display of maps or networks or other visual representations*	*pour la visualisation de données, p.ex. production ou de graphiques, affichage de cartes ou de réseaux ou autres représentations visuelles*
EN: approve AL , N	*19/28*	· · *for programming tools or database systems, e.g. ontologies, heterogeneous data integration, data warehousing or computing architectures*	*pour la programmation d'outils ou de systèmes de bases de données, p.ex. ontologies, intégration de données hétérogènes, entreposage de données ou architectures informatiques*

Schéma existant pour aide à la traduction.

G06F 19/00	**Digital computing or data processing equipment or methods, specially adapted for specific applications** (**G06F 17/00** takes precedence; data processing systems or methods specially adapted for administrative, commercial, financial, managerial, supervisory or forecasting purposes **G06Q**) **[6,8]** **Equipement ou méthodes de traitement de données ou de calcul numérique, spécialement adaptés à des applications spécifiques** (**G06F 17/00** a priorité; systèmes ou méthodes de **traitement** de données, spécialement adaptés	C

à des fins administratives, commerciales, financières, de gestion, de surveillance ou de prévision **G06Q**) **[6,8]**

Note(s)

This group covers: **[6]**

special constructions of computers to permit or facilitate use in specific applications; **[6]**

non-structural **adaptations** of computers to a specific application, e.g. computing methods. **[6]** Note(s)

Le présent groupe couvre: **[6]**

les structures particulières de calculateurs pour permettre ou faciliter l'utilisation dans des applications spécifiques; **[6]**

- les **adaptations** non structurelles de calculateurs à une application spécifique, p.ex. méthodes de calcul. **[6]**

DEUTSCHES PATENT- UND MARKENAMT German Patent and Trade Mark Office	Class/Subcl.: **G06F 19/xx** Date : 28.09.2009
DE - Comments — A 019	

Re: Annex 2, 10 and 14

Concerning the questions formulated in annex 10:

1) DE supports an additional note after subgroup 19/10 (in order to indicate that purely chemical methods are excluded from this subgroup). As the examples given in the scheme refer to chemical methods simulated in computer models, this additional note would eliminate or diminish potential misunderstandings.
2) From our point of view, the title with the examples in G06F 19/16 is formulated adequately.
3) We support the addition of the two examples in the title of G06F 19/18 suggested by EP / US in item 3 of annex 14.

Raluca Koch

Principal Directorate Patent Grant Automation - Directorate Classification		
Project: **A019**	Subject: **Bioinformatics**	IPC: **G06F 19/10**
Rapporteur Report		10 November 2009

Ref: Annexes 5, 8, 9, 11, 14, 16 of the project file

SCHEME

Background – WG questions

At the latest WG 21 meeting a scheme was approved (A.11 of project file) and comments were invited on:

1. whether an additional Note after subgroup G06F 19/10 was needed in order to indicate that purely chemical methods are excluded from this subgroup; and
2. whether the phrasing of examples in the title of subgroup G06F 19/16 was appropriate.

Comments received

Comments were sent by JP (A.11), EPO (A.14) that got the support of JPO and US by "remarks", and DE (A.16).

Question 1

A Note after G06F 19/10 is felt unnecessary by EPO/JP/US as purely chemical methods would not fit under G06F (a place for "Electric digital data processing ...") at all. Any useful informative references relevant for search and pointing to chemical places would be listed in the Definition layer. DE has a different opinion, but **R** is going to adopt the EPO/JP/US view.

R's conclusion is that a further Note after G06F 19/10 is not necessary.

Besides, a typo was spotted in the approved Note (1) after G06F 19/10, that needs to be corrected (*mutatis mutandis* in the French version):

Note(s)

1. This group also covers bioinformatics methods or systems where digital data processing is inherent **or ~~explicit~~ implicit**, but not explicitly mentioned.

Question 2

R's conclusion is that the title of group 19/16 is appropriate as approved. This was explicitly agreed by all commenting offices.

Improvement for title of group 19/18

Unrelated to questions 1. & 2. above, it was suggested to add two examples to the title of group 19/18, to comply with a specific request from US (item 3. of A.09):

19/18 for functional genomics or proteomics, e.g. genotype-phenotype associations, **linkage disequilibrium, population genetics**, binding site ---

This was supported by all commenting offices.

DEFINITION

This has been overlooked by the WG, but actually the Definition needs still to be approved, and the French version needs to be produced.

An initial proposal was sent in A.05. Comments were received by DE (A.08) & US (A.09).

US suggested that the Glossary terms should be alphabetized and associated with the new group 19/10 rather than being listed in relation to the subgroups.

Moreover, both DE and US had a number of small improvements which are easily taken into account by **R**.

The new proposal for the Definition follows. It has to be remarked that in the list of Informative references, the title of the IPC groups is not replicated in its original form, but rather the subject matter which is of interest for search is quoted. This is not in line with an explicit request from JPO (ref: project A012 for G06T, annexes 31 & 36) to quote references by their exact IPC title, but EPO experts feel that this can be of more help within this project.

With this proviso, **R submits a new Definition proposal that seems ready for approval**.

Offices in agreement with the new proposal are invited to post their approvals on the e-forum prior to the upcoming WG meeting at WIPO, in order to make possible a full adoption of the project at that occasion.

Roberto Iasevoli
Peter Swarén
Przemyslaw Godzina

IPC Revision WG – Definition Project	Project: **A019**
	Group: **G06F 19/10**
Rapporteur Proposal	Date : 10-11-2009

G06F 19/10

Bioinformatics ---

Definition statement

This group covers:

Methods or systems for genetic or protein related data processing in computational molecular biology.

Bioinformatics methods or systems where digital data processing is inherent or implicit, but not explicitly mentioned.

References relevant to classification in this group

This group does not cover:

In silico methods of screening virtual chemical libraries	C40B 30/02
In silico or mathematical methods of creating virtual chemical libraries	C40B 50/02

Informative references

Attention is drawn to the following places, which may be of interest for search:

Medical diagnosis	A61B 5/00
Manufacture of microarrays, DNA chips	B01J 19/00 C12M 1/34
PCR apparatus per se	B01L 7/00 C12M 1/38
Macromolecular X-ray crystallographic or NMR structures per se	C07K 14/00
Genetic engineering involving nucleic acids	C12N 15/00
Chemical reactions involving the use of microarrays, DNA chips	C12Q 1/68
Sequencing using PCR	C12Q 1/68
Gel electrophoresis apparatus per se	G01N 27/447
Sequencing using electrophoresis	G01N 27/447
Sequencing using chromatography	G01N 30/00
Sequencing using mass spectrometry	G01N 33/68
Pattern recognition	G06K 9/00
Computer input/output arrangements	G06F 3/00
Computer architectures or program control	G06F 9/00
Information retrieval, databases per se	G06F 17/30
Computer systems using neural network models per se	G06N 3/02
Computer systems using knowledge representation per se, e.g. expert systems	G06N 5/02
Computer systems using probabilistic models per se	G06N 7/00
Finding positions and orientations in microarray images by	G06T 7/00

image processing	
Mass spectrometry apparatus per se	H01J 49/00

Special rules of classification within this group

In this group, the first place priority rule is applied, i.e. at each hierarchical level, classification is made in the first appropriate place.

Glossary of terms

In this group, the following terms (or expressions) are used with the meaning indicated:

data mining	discovery and analysis of patterns within a vast amount of genetic or protein-related data
data visualisation	generation and/or display of graphical representations of genetic and protein-related data
domain	domain of a protein is an element of the overall molecular structure that is self-stabilising and often folds independently of the rest of a polypeptide chain
drug targeting	drug design strategy aiming at optimising the properties of a medicinal compound, based on the 3-dimensional structure of a target, for delivery to a particular tissue or organ in the body
fragment assembly	method by which linear portions of sequence information are assembled to obtain full length gene sequence data
functional genomics	experimental analyses aiming at assessing the function of genes in determining traits, physiology and/or development of an organism, making use of computational and high-throughput technologies
gene expression	process by which proteins are made or transcribed from the instructions encoded in DNA
gene expression profiling	determination of the pattern of genes expressed, i.e. transcribed, under specific circumstances or in a specific cell line
gene finding	method of searching genomic DNA sequences to identify open reading frames which encode proteins
genome annotation	allocation of functions to individual genes in the genome
genotype	genetic makeup or profile of an organism with respect to a trait
genotyping	analysis of an organism's genotype
haplotype	set of one or more polymorphisms (sequence variations) that may be found at a particular genetic location on the same chromosome
homology	indication of the amount of similarity between two sequences; homology determinations can include allowance for gaps, insertions, deletions and mismatches between the aligned sequences
linkage disequilibrium	tendency of alleles located close to each other on the same chromosome to be inherited together
microarray	plurality of nucleic acid probes attached to a substrate, which form an ordered pattern

molecular structure	2-dimensional or 3-dimensional arrangement of atoms, groups of atoms or domains in nucleic aids, proteins, peptides and amino acids
motif	specific nucleotide or amino acid sequence pattern
noise correction model	model that accounts for non-signal data, such as for microarrays: optical noise, quality control problems and cross hybridisation
ontology	classification methodology for formalising a subject's knowledge in a structured and controlled vocabulary
orthologue	homologous sequence found in different species and derived from a common ancestor
paralogue	homologous sequence in the same organism derived from gene duplication
pedigree	family tree describing the occurrence of heritable traits across generations
phylogenetic tree	tree-like graphical representation of phylogenetic relationships
phylogeny	reconstruction of an evolutionary development and history of a species or higher taxonomic grouping of organisms; typically represented as a phylogenetic tree; methods for creating phylogenetic trees
population genetics	study of genetic variation and genetic evolution of populations
probe design and optimisation for microarrays	designing and selecting (i) optimal, highly specific probes, e.g. oligonucleotides, cDNA, fragments for hybridisation experiments with microarrays and (ii) optimal sets of probes, e.g. oligonucleotides, cDNA, to be chemically attached to a solid support to form an array
programming tools or database systems	computer software to assist programming procedures within bioinformatics and database systems for managing genetic/ protein-related data
protein folding	process by which a polypeptide chain folds into a specific 3-dimensional structure
proteomics	large-scale study of the functions of proteins and their interactions with other molecular entities in a biological system
sequence comparison	process of comparing nucleic or amino acid sequences, generally by a linear alignment in such a way that equivalent positions in adjacent sequences are brought into the correct alignment with each other by introducing insertions in suitable positions, in order to identify similarities and/or differences amongst the compared sequences
sequencing by hybridisation	DNA sequencing technique in which an array of short sequences of nucleotides is brought in contact with a solution of a target DNA sequence, a biochemical method determines a subset of probes that bind to the target sequence and a combinatorial method is then used to reconstruct the DNA sequence from the spectrum
SNP	single nucleotide polymorphism: a DNA sequence variation that involves a change in a single nucleotide

	and is commonly present in a part of a population
structure alignment	form of alignment to establish structural and functional equivalences between two or more proteins based on their secondary or tertiary structures
syntenic regions	corresponding regions in a species to an observed grouping of genes in the same order and on the same chromosome in another species
systems biology	simulation and mathematical modelling of relationships and interactions between molecular entities in sub-cellular systems integrating genetic and/or protein-related data to describe the dynamic behaviour of, for example, protein-protein/protein-ligand interactions, regulatory networks and metabolic networks
taxonomy	classification of organisms to show their evolutionary relationships to other organisms

G06F 19/12

for modelling or simulation in systems biology ---

Definition statement

This group covers:

Simulation or mathematical modelling of relationships and interactions between molecular entities on a subcellular level, integrating genetic and/or protein-related data to describe the dynamic behaviour of protein-protein/protein-ligand interactions, regulatory or metabolic networks.

Mere mention of modelling or simulation is not sufficient to classify in this group. In such cases, see the other subgroups of group G06F 19/10 following this one in the scheme.

G06F 19/14

for phylogeny or evolution ---

Definition statement

This group covers:

Analysis of orthologous, paralogous, syntenic or taxonomic relationships.

Generation of pedigrees and phylogenetic trees.

Mere mention of evolutionary data is not sufficient to classify in this group. In such cases, see the other subgroups of group G06F 19/10 following this one in the scheme.

G06F 19/16

for molecular structure ---

Definition statement

This group covers:

Structural architecture of proteins, peptides, amino acids and nucleic acids and the prediction thereof.

Processes including structural alignment, protein folding, domain topology, molecular modelling, receptor-ligand modelling, docking methods, structural-functional relationships and drug targeting using structure data, as well as two- and three-dimensional structure prediction and/or analysis.

The structure types include secondary, tertiary and quaternary structures.

Mere mention of structural data is not sufficient to classify in this group. In such cases, see the other subgroups of group G06F 19/10 following this one in the scheme.

G06F 19/18

for functional genomics or proteomics ---

Definition statement

This group covers:

Assessment of the function of genes and proteins in determining traits, physiology and/or development of an organism, making use of computational and large scale, high-throughput technologies.

Genotypic-phenotypic associations, including genotyping and genome annotation, linkage disequilibrium analysis and association studies, population genetics, alternative splicing and Short Interfering RNA design (siRNA, RNAi).

Binding site identification, mutagenesis analysis, protein-protein or protein-nucleic acid interactions.

Mere mention of gene or protein function is not sufficient to classify in this group. In such cases, see the other subgroups of group G06F 19/10 following this one in the scheme.

G06F 19/20

for hybridisation or gene expression ---

Definition statement

This group covers:

Analysis of gene expression information. This includes microarray analysis, gel electrophoresis analysis and sequencing by hybridisation. Further covered technologies include probe design and probe optimisation, microarray normalisation, expression profiling, noise correction models, expression ratio estimation.

Mere mention of hybridisation or gene expression is not sufficient to classify in this group. In such cases, see the other subgroups of group G06F 19/10 following this one in the scheme.

Relationship between large subject matter areas

This group does not cover base calling or sequencing methods per se. These are covered by the relevant places listed under section Informative References for group G06F 19/10.

G06F 19/22

for sequence comparison involving nucleotides or amino acids ---

Definition statement

This group covers:

Comparison of sequence information, wherein the sequences are nucleic acids or amino acids. The comparisons include methods of alignment, homology identification, motif identification, SNP (Single-Nucleotide Polymorphism) discovery, haplotype identification, fragment assembly, gene finding.

Mere mention of sequence data is not sufficient to classify in this group. In such cases, see the other subgroups of group G06F 19/10 following this one in the scheme.

G06F 19/24

for machine learning, data mining or biostatistics ---

Definition statement

This group covers:

Discovery and/or analysis of patterns within a vast amount of genetic or protein-related data, wherein the emphasis is placed on the method of analysis and is largely independent of the type of bioinformatic data. Covered methods include bioinformatic pattern finding, knowledge discovery, rule extraction, correlation, clustering and classification.

Multivariate analysis of protein or gene-related data, e.g. analysis of variances (ANOVA), principal component analysis (PCA), support vector machines (SVM).

G06F 19/26

for data visualisation ---

Definition statement

This group covers:

Visual representations specifically adapted to bioinformatic data, wherein the emphasis is placed on the method of visualisation and is largely independent of the type of bioinformatic data. Visualisation of bioinformatic data specifically includes, for example, graphics generation, map display and network display.

G06F 19/28

for programming tools or database systems ---

Definition statement

This group covers:

Computer software specifically adapted to assist programming procedures within bioinformatics and database systems specifically adapted for managing bioinformatic data. This includes ontologies, heterogeneous data integration, data warehousing, computing architectures.

Observations FR sur la version française **novembre 2009**

ANNEXE 1E,F **G06F** **[Projet-Rapporteur : A019/EP]** **<WG21>**

EN: approve CL , C	***19/00***	***Digital computing or data processing equipment or methods, specially adapted for specific applications*** *(**G06F 17/00**takes precedence; data processing systems or methods specially adapted for administrative, commercial, financial, managerial, supervisory or forecasting purposes **G06Q**)*	***Equipement ou méthodes de traitement de données ou de calcul numérique, spécialement adaptés à des applications spécifiques*** *(**G06F 17/00** a priorité; systèmes ou méthodes de **traitement** de données, spécialement adaptés à des fins administratives, commerciales, financières, de gestion, de surveillance ou de prévision **G06Q**)*
EN: approve AL , N	*19/10*	· *Bioinformatics, i.e. methods or systems for genetic or protein-related data processing in computational molecular biology (in silico methods of screening virtual chemical libraries **C40B 30/02**; in silico or mathematical methods of creating virtual chemical libraries **C40B 50/02**)*	*Bio-informatique, p.ex. méthodes ou systèmes pour le traitement de données génétiques ou se rapportant aux protéines en biologie moléculaire ~~computationnelle~~ informatique (~~méthodes~~ procédés in silico de criblage ~~par ordinateur (in silicio)~~ de bibliothèques chimiques virtuelles **C40B 30/02**; ~~méthodes~~ procédés ~~de création~~ mathématiques ou ~~par ordinateur (~~in silic~~io)~~ de création de bibliothèques chimiques virtuelles **C40B 50/02**)*
EN: questionWithApproval AL , N	*Note 19/10*	1. *This group also covers bioinformatics methods or systems where digital data processing is inherent or explicit, but not explicitly mentioned.* **[new.]** 2. In this group, the following term is used with the meaning indicated: • *"systems" include apparatus.* **[new.]** 3. *In this group, at each hierarchical level, in the absence of an indication to the contrary, classification is made in the first appropriate place.* **[new.]**	*Le présent groupe couvre également les méthodes ou les systèmes ~~de~~ bio-informatiques dans lesquels le traitement de~~s~~ données numériques est inhérent ou explicite, mais non mentionné explicitement.* Dans le présent groupe, l'expression suivante a la signification ~~ci-dessous~~ indiquée ci-dessous: *"systèmes" comprend les appareils.* *Dans le présent groupe, à chaque niveau hiérarchique, sauf indication contraire, le classement s'effectue à la première place appropriée.*
EN: approve AL , N	*19/12*	· · *for modelling or simulation in systems biology, e.g. probabilistic or dynamic models, gene-regulatory networks, protein interaction networks or metabolic networks*	*pour la modélisation ou la simulation ~~en biologie des appareils anatomiques~~de systèmes biologiques, p.ex. modèles probabilistes ou dynamiques, réseaux régulateurs de gènes, réseaux d'interaction protéique ou réseaux métaboliques*

Formatted: Underline

Formatted: Underline

Formatted: Highlight

Formatted: English U.K.

Comment [s1]: Est-ce que l'expression en anglais est correcte? Ne serait-ce pas « in biological systems » plutôt ?

EN: approve AL , N	*19/14*	· · *for phylogeny or evolution, e.g. evolutionarily conserved regions determination or phylogenetic tree construction*	*pour la phylogénie ou l'évolution, p.ex. détermination de régions conservées sur le plan évolutionniste ou établissement d'un arbre phylogénique*
EN: questionWithApproval AL , N	*19/16*	· · *for molecular structure, e.g. structure alignment, structural or functional relations, protein folding, domain topologies, drug targeting using structure data, involving two-dimensional or three-dimensional structures*	*pour la structure moléculaire, p.ex. alignement de la structure, relations structurales ou fonctionnelles, repliement protéique, topologies de domaine, ciblage de médicaments utilisant des données de structure, impliquant des structures bidimensionnelles ou tridimensionnelles*
EN: approve AL , N	*19/18*	· · *for functional genomics or proteomics, e.g. genotype-phenotype associations, binding site identification, mutagenesis, genotyping or genome annotation, protein-protein interactions or protein-nucleic acid interactions*	*pour la génomique ou la protéomique fonctionnelle, p.ex. associations génotype-phénotype, identification des sites de liaison, mutagénèse, génotypage ou annotation génomique, interactions protéines-protéines ou interactions protéines-acides nucléiques*
EN: approve AL , N	*19/20*	· · *for hybridisation or gene expression, e.g. microarrays, sequencing by hybridisation, normalisation, profiling, noise correction models, expression ratio estimation, probe design or probe optimisation*	*pour l'hybridation ou l'expression génique, p.ex. microréseaux, séquençage par hybridation, normalisation, profilage, modèles de correction de bruit, estimation du ratio d'expression, conception ou optimisation de ~~la~~ sonde*
EN: approve AL , N	*19/22*	· · *for sequence comparison involving nucleotides or amino acids, e.g. homology search, motif or SNP [Single-Nucleotide Polymorphism] discovery or sequence alignment*	*pour la comparaison de séquences impliquant des nucléotides ou des acides aminés, p.ex. recherche d'homologie, ~~extraction~~ identification de motifs ou de SNP (polymorphismes de nucléotides simples) ou alignement de séquences*
EN: approve AL , N	*19/24*	· · *for machine learning, data mining or biostatistics, e.g. pattern finding, knowledge discovery, rule extraction, correlation, clustering or classification*	*pour l'apprentissage ~~machine~~automatique, l'exploration de données ou l~~a~~es bio statistiques, p.ex. détection de ~~formes~~motifs, extraction de connaissances, extraction de règles, corrélation, agrégation ou classification*
EN: approve AL , N	*19/26*	· · *for data visualisation, e.g. graphics generation, display of maps or networks or other visual representations*	*pour la visualisation de données, p.ex. production ~~ou~~ de graphiques, affichage de cartes ou de réseaux ou autres représentations visuelles*
EN: approve AL , N	*19/28*	· · *for programming tools or database systems, e.g. ontologies, heterogeneous data integration, data warehousing or computing architectures*	*pour la programmation d'outils ou de systèmes de bases de données, p.ex. ontologies, intégration de données hétérogènes, entreposage de données ou architectures informatiques*

Schéma existant pour aide à la traduction.

G06F 19/00	**Digital computing or data processing equipment or methods, specially adapted for specific applications** (**G06F 17/00** takes precedence; data processing systems or methods specially adapted for	

administrative, commercial, financial, managerial, supervisory or forecasting purposes **G06Q**) **[6,8]** **Equipement ou méthodes de traitement de données ou de calcul numérique, spécialement adaptés à des applications spécifiques** (**G06F 17/00** a priorité; systèmes ou méthodes de **traitement** de données, spécialement adaptés à des fins administratives, commerciales, financières, de gestion, de surveillance ou de prévision **G06Q**) **[6,8]**

Note(s)

This group covers: **[6]**

special constructions of computers to permit or facilitate use in specific applications; **[6]**

non-structural **adaptations** of computers to a specific application, e.g. computing methods. **[6]** Note(s)

Le présent groupe couvre: **[6]**

les structures particulières de calculateurs pour permettre ou faciliter l'utilisation dans des applications spécifiques; **[6]**

- les **adaptations** non structurelles de calculateurs à une application spécifique, p.ex. méthodes de calcul. **[6]**

IPC/A 020
ORIGINAL: English/French
DATE: 25.11.2009

WORLD INTELLECTUAL PROPERTY ORGANIZATION
ORGANISATION MONDIALE DE LA PROPRIÉTÉ INTELLECTUELLE

GENEVA/GENÈVE

COMMITTEE OF EXPERTS OF THE IPC UNION
COMITÉ D'EXPERTS DE L'UNION DE L'IPC

AL REVISION PROJECT FILE
DOSSIER DE PROJET RÉVISION NIVEAU ÉLEVÉ

PROPOSAL BY : **JP** **PROPOSITION DE :**	**IPC AREA:** **H01R 12/00-12/38** **DOMAINE DE LA CIB :**
RAPPORTEUR : **JP**	**TECHNICAL FIELD :** **E** **DOMAINE TECHNIQUE :**

ANNEX/ ANNEXE	CONTENT/CONTENU		ORIGIN/ ORIGINE	DATE
1	Revision request with proposal	Demande de révision avec proposition	JP	29.09.2008
2	Decision of the subcommittee	Décision du cous-comité	IB	27.10.2008
3	Comments	Observations	US	25.12.2008
4	Comments	Observations	IB	04.02.2009
5	Rapporteur summary for next ALS		JP	05.02.2009
6	Technical Annexes		IB	16.02.2009
7	Decision of the subcommittee	Décision du cous-comité	IB	24.03.2009
8	Proposal - definitions	Proposition - définitions	JP	26.03.2009
9	Proposal - RCL	Proposition - RCL	IB	08.04.2009
10	List of cross references	Liste des renvois	IB	08.04.2009
11	Comments - RCL and cross references	Observations - RCL et des renvois	JP	14.04.2009
12	French version	Version française	IB	08.05.2009
13	Comments	Observations	EP	04.06.2009
14	Rapporteur report	Rapport du rapporteur	JP	08.06.2009
15	Rapporteur summary for next WG		JP	08.06.2009
16	Working Group decision	Décision du groupe de travail	IB	03.08.2009

ANNEX/ ANNEXE	CONTENT/CONTENU		ORIGIN/ ORIGINE	DATE
17	Rapporteur report	Rapport du rapporteur	JP	11.08.2009
18	Proposal - definitions	Proposition - définitions	JP	11.08.2009
19	Comments - French version	Observations - version française	EP	07.10.2009
20	Comments	Observations	FR	04.11.2009
21	Rapporteur report	Rapport du rapporteur	JP	06.11.2009
22	Rapporteur summary for next WG		JP	17.11.2009
23	Comments	Observations	EP	20.11.2009
24	Comments - Definitions	Observations - Défintions	JP	25.11.2009

EXCERPT FROM DOCUMENT IPC/WG/21/2
EXTRAIT DU DOCUMENT IPC/WG/21/2

REPORT ON THE SEVENTH SESSION OF THE IPC ADVANCED LEVEL SUBCOMMITTEE

17. Since the seventh session of the ALS was the final one, all pending A projects were included in the program of the Working Group. From now on, A projects will designate revision projects originating from the IP5 Offices and C projects will designate revision projects that would be included in the IPC revision program by the Committee. For practical reasons, the schemes adopted by the ALS in the framework of projects A 012, A 013, A 014, A 017, A 018 and A 020 were included in the Technical Annexes of this session (see Technical Annexes 1 to 7 and 9 to this report).

IPC REVISION PROGRAM

General

25. The Working Group noted the decision by the Committee of Experts at its forty-first session that revision projects, including advanced level revision projects, would be considered by the Working Group and forwarded to the Committee for final adoption after completion. It was noted that projects originating from the Trilateral or the IP5 Offices cooperation will be designated by the letter “A” and revision projects included in the IPC revision program by the Committee will be designated by the letter “C” (see paragraph 17, above).

26. Discussions were based on compilations of the relevant revision project files. The Working Group considered nine pending C projects, plus 17 A projects forwarded from the former ALS, and approved amendments relating to those projects (see Technical Annexes 1 to 29 to this report relating to revision projects). The status of those projects and the list of future actions and deadlines are indicated in Annex III to this report.

IPC Revision Projects

27. The Working Group made the following observations with respect to the IPC revision projects. All references to annexes in this paragraph refer to annexes of the corresponding project file, unless otherwise stated.

Project A 020 (electrical) –The RCL of Annex 9 was approved, including the remarks of Japan in Annex 11, and the CRL of Annex 10 was approved with minor amendments (see Technical Annex 9E to this report).

Comments were invited on the French version of Annex 12, to be followed by a consolidated rapporteur proposal. The Rapporteur was invited to consider the appropriateness of citing patent document numbers as examples in the definition statements in subgroups H01R 12/88 and H01R 12/89 in Annex 8. Alternatively, illustrations taken from the cited patent documents could be included.

RAPPORT SUR LA SEPTIÈME SESSION DU SOUS-COMITÉ CHARGÉ DU NIVEAU ÉLEVÉ DE LA CIB

17. Étant donné que la septième session de l’ALS était la dernière, tous les projets A en instance ont été inscrits au programme du groupe du travail. Dorénavant, les projets A désigneront les projets de révision émanant des offices de l’IP5 et les projets C désigneront les projets de révision qui seront inscrits au programme de révision de la CIB par le comité. Pour des raisons pratiques, les schémas adoptés par l’ALS dans le cadre des projets A 012, A 013,

A 014, A 017, A 018 et A 020 ont été inclus dans les annexes techniques du rapport sur la session en cours (voir les annexes techniques 1 à 7 et 9 du présent rapport).

PROGRAMME DE RÉVISION DE LA CIB

Généralités

25. Le groupe de travail a pris note de la décision prise par le comité d'experts à sa quarante et unième session selon laquelle les projets de révision, y compris ceux relatifs au niveau élevé, seront examinés par le groupe de travail et transmis au comité pour adoption définitive une fois achevés. Il a été pris note du fait que les projets émanant des offices de la coopération trilatérale ou de l'IP5 seraient désignés par la lettre "A" et que les projets de révision inscrits au programme de révision de la CIB par le comité seraient désignés par la lettre "C" (voir le paragraphe 17).

26. Les délibérations ont eu lieu sur la base de synthèses des dossiers de projet correspondants. Le groupe de travail a examiné neuf projets C en instance ainsi que 17 projets A transmis par l'ancien ALS et a approuvé les modifications relatives à ces projets (voir les annexes techniques 1 à 29 du présent rapport relatives aux projets de révision). L'état d'avancement de ces projets et la liste des mesures à prendre et des délais correspondants font l'objet de l'annexe III du présent rapport.

Projets de révision de la CIB

27. Le groupe de travail a formulé les observations ci-après concernant les projets de révision de la CIB. Dans le présent paragraphe, tout renvoi à des annexes désigne, sauf indication contraire, les annexes du dossier de projet correspondant.

Projet A 020 (électricité) –La table de concordance figurant à l'annexe 9 a été approuvée, avec les observations du Japon indiquées à l'annexe 11, et la table des renvois croisés figurant à l'annexe 10 a été approuvée sous réserve de modifications mineures (voir l'annexe technique 9E du présent rapport).

Des observations ont été demandées sur la version française figurant à l'annexe 12, en vue de l'établissement d'une proposition de synthèse du rapporteur. Le rapporteur a été invité à examiner l'opportunité de citer les numéros de documents de brevet comme exemples dans les énoncés de définition des sous-groupes H01R 12/88 et H01R 12/89 figurant à l'annexe 8. À défaut, des illustrations tirées des documents de brevet cités pourraient être utilisées.

ANNEX 9E H01R [Project-Rapporteur : A020/JP] <WG21>

CL M **4/00 Electrically-conductive connections between two or more conductive members in direct contact, i.e. touching one another; Means for effecting or maintaining such contact; Electrically-conductive connections having two or more spaced connecting locations for conductors and using contact members penetrating insulation** (details of contacts of coupling devices **H01R 13/00**; coupling devices **H01R 12/70**, **H01R 24/00-H01R 33/00**; flexible or turnable line connectors **H01R 35/00** non-rotary current collectors **H01R 41/00**)

AL M 4/02 · Soldered or welded connections (**H01R 4/62**, **H01R 12/59**, **H01R 12/65** take precedence)

CL M **9/00 Structural associations of a plurality of mutually-insulated electrical connecting elements, e.g. terminal strips, terminal blocks; Terminals or binding posts mounted upon a base or in a case; Bases therefor** (details of direct connections or connections

using contact members penetrating insulation **H01R 4/00**; specially adapted for printed circuits, flat or ribbon cables, or like generally planar structures **H01R 12/00**; coupling devices **H01R 12/70**, **H01R 24/00-H01R 33/00**; flexible or turnable line connectors **H01R 35/00**)

CL M **11/00 Individual connecting elements providing two or more spaced connecting locations for conductive members which are, or may be, thereby interconnected, e.g. end pieces for wires or cables supported by the wire or cable and having means for facilitating electrical connection to some other wire, terminal, or conductive member, blocks of binding posts** (connections between members in direct contact **H01R 4/00**; structural associations of a plurality of mutually-insulated electrical connecting elements **H01R 9/00**; coupling devices **H01R 12/70**, **H01R 24/00-H01R 29/00**, **H01R 33/00**; flexible or turnable line connectors **H01R 35/00**)

AL D 12/02- 12/38 (transferred to **H01R 12/50-H01R 12/91**)

AL N *12/50* · *Fixed connections*

AL N *12/51* · · *for rigid printed circuits or like structures*

AL N *12/52* · · · *connecting to other rigid printed circuits or like structures*

AL N *12/53* · · · *connecting to cables except for flat or ribbon cables*

AL N *12/55* · · · *characterised by the terminals*

AL N *12/57* · · · · *surface mounting terminals*

AL N *12/58* · · · · *terminals for insertion into holes*

AL N *12/59* · · *for flexible printed circuits, flat or ribbon cables or like structures*

AL N *12/61* · · · *connecting to flexible printed circuits, flat or ribbon cables or like structures*

AL N *12/62* · · · *connecting to rigid printed circuits or like structures*

AL N *12/63* · · · *connecting to another shape cable*

AL N *12/65* · · · *characterised by the terminal*

AL N *12/67* · · · · *insulation penetrating terminals*

AL N *12/68* · · · · · *comprising deformable portions*

AL N *12/69* · · · · *deformable terminals e.g. crimping terminals*

AL N *12/70* · *Coupling devices*

AL N *12/71* · · *for rigid printing circuits or like structures*

AL N *12/72* · · · *coupling with the edge of the rigid printed circuits or like structures*

AL N *12/73* · · · · *connecting to other rigid printed circuits or like structures*

AL N *12/75* · · · *connecting to cables except for flat or ribbon cables*

AL N *12/77* · · *for flexible printed circuits, flat or ribbon cables or like structures*

AL N *12/78* · · · *connecting to other flexible printed circuits, flat or ribbon cables or like structures*

AL N *12/79* · · · *connecting to rigid printed circuits or like structures*

AL N *12/81* · · · *connecting to another cable except for flat or ribbon cable*

AL N *12/82* · · *connected with low or zero insertion force*

AL N *12/83* · · · *connected with pivoting of printed circuits or like after insertion*

AL N *12/85* · · · *contact pressure producing means, contacts activated after insertion of printed circuits or like structures*

AL N *12/87* · · · · *acting automatically by insertion of rigid printed or like structures*

AL N *12/88* · · · · *acting manually by rotating or pivoting connector housing parts*

AL N *12/89* · · · · *acting manually by moving connector housing parts linearly e.g. slider*

AL N *12/91* · · *allowing relative movement between coupling parts e.g. floating or self aligning*

CL M **13/00 Details of coupling devices of the kinds covered by groups H01R 12/70 or H01R 24/00-H01R 33/00**

ANNEXE 9F H01R [Projet-Rapporteur : A020/JP] <WG21>
[Tr.:]

CL M **4/00 Connexions conductrices de l'électricité entre plusieurs organes conducteurs en contact direct, c. à d. se touchant l'un l'autre; Moyens pour réaliser ou maintenir de tels contacts; Connexions conductrices de l'électricité ayant plusieurs emplacements espacés de connexion pour les conducteurs et utilisant des organes de contact pénétrant dans l'isolation** (détails des contacts de dispositifs de couplage **H01R 13/00**; dispositifs de couplage **H01R 12/70**, **H01R 24/00-H01R 33/00**; connecteurs de ligne flexibles ou tournants **H01R 35/00**; collecteurs de courant non rotatifs **H01R 41/00**)

AL M 4/02 · Connexions soudées ou brasées (**H01R 4/62**, **H01R 12/59**, **H01R 12/65** ont priorité)

CL M **9/00 Association structurelle de plusieurs éléments de connexion électrique isolés les uns des autres, p.ex. barrettes de raccordement, blocs de connexion; Bornes ou plots de raccordement montés sur un socle ou dans un coffret; Leurs socles** (détails de connexions à contact direct ou de connexions utilisant des organes de contact pénétrant dans l'isolation **H01R 4/00**; spécialement conçue pour des circuits imprimés, des câbles plats ou à ruban ou des structures similaires généralement planes **H01R 12/00**; dispositifs de couplage **H01R 12/70**, **H01R 24/00-H01R 33/00**; connecteurs de ligne flexibles ou tournants **H01R 35/00**)

CL M **11/00 Éléments de connexion individuels assurant plusieurs emplacements de connexion espacés pour des organes conducteurs qui sont ou qui peuvent être interconnectés de cette façon, p.ex. pièces d'extrémité pour fils ou câbles supportées par le fil ou par le câble et possédant des moyens pour faciliter la connexion électrique avec quelqu'autre fil, borne, ou organe conducteur, répartiteurs** (connexions entre organes en contact direct **H01R 4/00**; association structurelle de plusieurs éléments de connexion électrique isolés les uns des autres **H01R 9/00**; dispositifs de couplage **H01R 12/70**, **H01R 24/00-H01R 29/00**, **H01R 33/00**; connecteurs de ligne flexibles ou tournants **H01R 35/00**)

CL M **13/00 Détails de dispositifs de couplage des types couverts par les groupes H01R 12/70 ou H01R 24/00-H01R 33/00**

JAPAN PATENT OFFICE August 11, 2009

Project: A020 Subclass: H01R

JP Rapporteur Report

JP as Rapporteur of this project is pleased to report that the revised Proposal – Definitions is posted herewith. Major revision was made in two points.

1. A wrong wording in the Definition Statement for H01R 12/88 and 12/89 in the original proposal in Annex 8 was corrected in accordance with EP advice in Annex 13. JP is grateful that EP made that remark.

2. As an aid to better understanding, several illustrations were inserted in the revised proposal that were taken from the cited patent documents. That was in compliance with the proposal during the 21st session of IPC Revision Working Group held in June, 2009.

[END]

IPC – Definition Project **JP** Rapporteur Proposal	Project: A020 Class/subclass: H01R Date : 11/11/2009

Title – H01R12/00

Structural associations of a plurality of mutually-insulated electrical connecting elements, specially adapted for printed circuits, e.g. printed circuit boards (PCBs), flat or ribbon cables, or like generally planar structures, e.g. terminal strips, terminal blocks; Coupling devices specially adapted for printed circuits, flat or ribbon cables, or like generally planar structures; Terminals specially adapted for contact with, or insertion into, printed circuits, flat or ribbon cables, or like generally planar structures

References relevant to classification in this group

This group does not cover:

Printed connections to, or between, printed circuits	H05K 1/11

Special rules of classification within this group

In this group, when it is called just a "connector", it is a connector which has a character for classification. When the connections are characterized by the connectors to be coupled of both parties, then the classification is given to each of both connectors.

When the counterpart of connection is identified, classification is given in H01R 12/70 and subsequent subgroups. On the other hand, if the subject of connection is not identified but only the mounting of the connector to a printed circuit board is suggested, classification is given in H01R 12/55~12/58,12/65~12/69 and H01R 12/70.

Glossary of Terms

Hereafter, in this group, the following term is used in the sense of the following.

A rigid printed circuit board: A rigid printed circuit board (PCB) and a rigid case which contains printed circuit and has external electric terminals on the outside part of it, and a card, such as a PC card, is included.

A flexible printed circuit board: It is a printed circuit board which has flexibility, and a flat or a ribbon cable is included.

Printing circuit board: Both of the above "a rigid printed circuit board" and "a flexible printed circuit board"

Terminal: Conductive part material sets as the object of electric connection

Connector: Conductive terminals surrounded by an insulating housing used for male –female coupling. Simple "terminal" which does not have housing is not included.

Direct connection: Irremovable connection of terminals using solder, adhesive, welding, insulation displacement edge, a rivet, a screw, etc.

Title – H01R12/50

Fixed connections

Definition statement

This group covers:

Fixed connection between a plurality of printed circuit boards.

Title – H01R12/51

For rigid printed circuits or like structures

Definition statement

This group covers:

Fixed connection of which one party is a rigid printed circuit board

Fixed connection for members (e.g. connectors) to rigid printed circuit board by other structures than terminals (e.g. housing) that are not covered by H01R 12/52~12/58

Special rules of classification within this group

Those characterized by the terminals are classified in H01R 12/55~12/58.

Title – H01R12/52

Connecting to other rigid printed circuits or like structures

Definition statement

This group covers:

Fixed connection of which both of the connecting parties are rigid printed circuit board (Example: US5984692A, WO99/44260A)

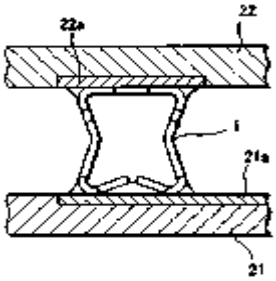

（US5984692A）

Title –H01R12/53

Connecting to cables except for flat or ribbon cables

Definition statement

This group covers:

Fixed connection for cables mounted on rigid printed circuit board. When a cable is a flat or a ribbon cable, it is classified in H01R12/62. (Example: US5667390A, EP1246309A)

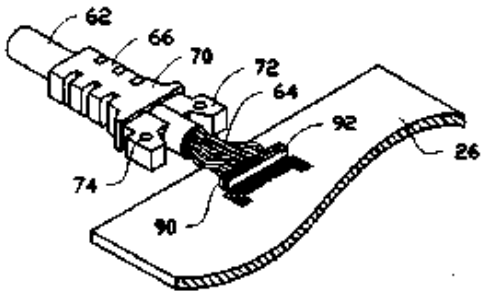

(US5667390A)

Title – H01R12/55

Characterized by the terminals

Definition statement

This group covers:

Fixed connection for terminals to the rigid printed circuit board characterized by the shape or the mounting means of terminals, e.g. edge contact, including mounting of connectors to the printed circuit board (Example: EP178540A, JP2001-237008A)

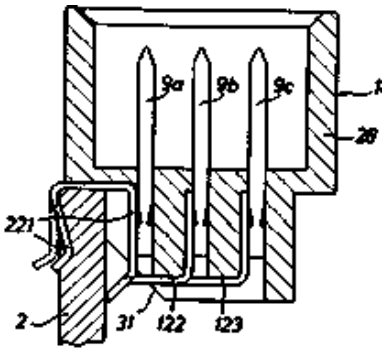

(EP178540A)

Title – H01R12/57

Surface mounting terminals

Definition statement

This group covers:

Fixed connection for terminals (including terminals of the connector) mounted directly on the rigid printed circuit board by using soldering, etc. (Example: EP1473802A, US6623283B, WO95/10865A)

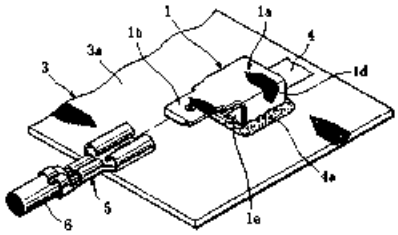

(EP1473802A)

Title –H01R12/58

Terminals for insertion into holes

Definition statement

This group covers:

Fixed connection for terminals (including terminals of the connector) inserted into holes that are provided on rigid printed circuit board (Example: WO94/24730A, EP499431A, WO96/7220A)

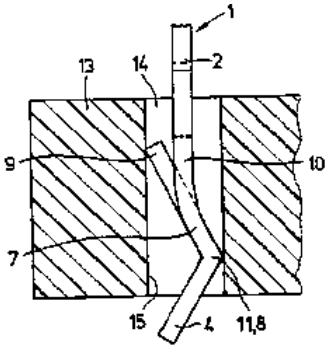

(WO94/24730A)

Title – H01R12/59

For flexible printed circuits, flat or ribbon cables or like structures

Definition statement

This group covers:

Fixed connection of which one party is flexible printed circuit board

Fixed connection for members (e.g. connectors) to flexible printed circuit board by other structures than terminals (e.g. housing) that are not covered by H01R 12/61~12/69

(Example: JP2000-294314A)

Special rules of classification within this group

Those characterized by the connection of terminals are classified in H01R 12/65~12/69.

Title – H01R12/61

Connecting to flexible printed circuits, flat or ribbon cables or like structures

Definition statement

This group covers:

Fixed connection directly connecting between flexible printed circuit boards (Example: US2002/0028598A1, US2003/0098342A1, US2002/0092666A1)

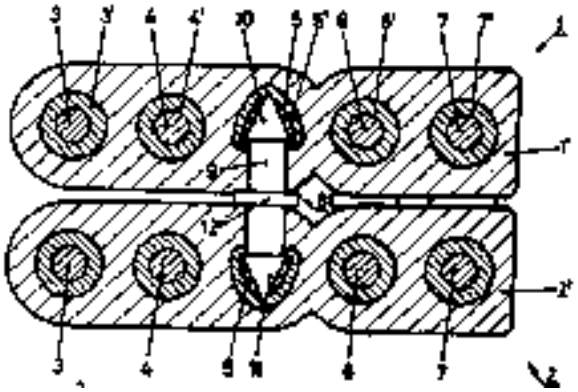

(US2002/0028598A1)

Title – H01R12/62

Connecting to rigid printed circuits or like structures

Definition statement

This group covers:

Fixed connection directly connecting between flexible printed circuit board and rigid printed circuit board (Example: US2002/0004341A1)

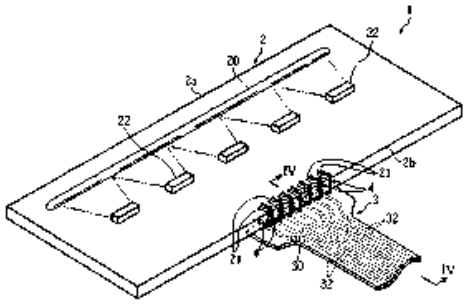

(US2002/0004341A1)

Title – H01R12/63

Connecting to another shape cable

Definition statement

This group covers:

Fixed connection for cables directly mounted on flexible printed circuit board (Example: EP1035616A, EP698943A, JP2001-313457A)

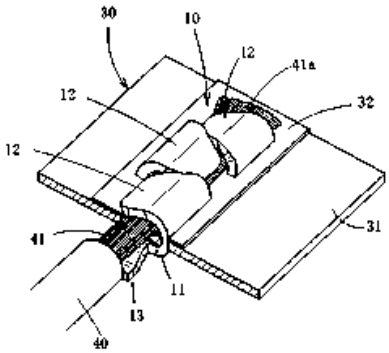

(EP1035616A)

Title – H01R12/65

Characterized by the terminal

Definition statement

This group covers:

Fixed connection characterized by the terminals directly mounted on flexible printed circuit board, e.g. edge contact (Examples: US2001/0019918A1, JP11-329533A)

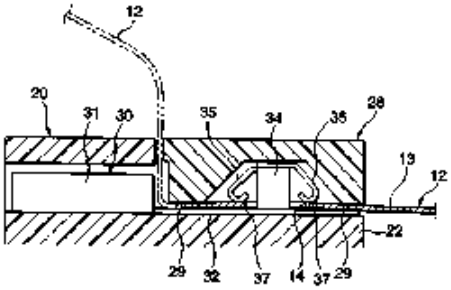

(US2001/0019918A1)

Title – H01R12/67

Insulation penetrating terminals

Definition statement

This group covers:

Fixed connection by terminals penetrating the flexible printed circuit board e.g. insulation displacement terminal (Example：EP932221A, US2002/0076969A1, US2002/0028598A1)

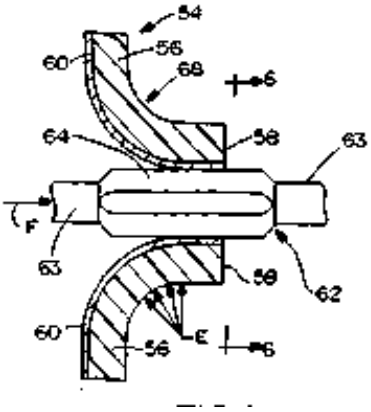

(EP932221A)

Title – H01R12/68

Comprising deformable portions

Definition statement

This group covers:

Fixed connection by terminals that are secured to the conducting body after penetrating and bending and connected to flexible printed circuit board (Example：US2003/0106211A1, US2001/0014553A1)

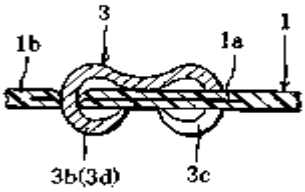

(US2003/0106211A1)

Title – H01R12/69

Deformable terminals e.g. crimping terminals

Definition statement

This group covers:

Fixed connection by partially deformed terminals connected to conductors of flexible printed circuit board e.g. Crimping terminals Excluding those penetrating the flexible printed circuit boardH01R 12/67,68 (Example：US6375492B, JP2002-184246A, JP10-021979A）

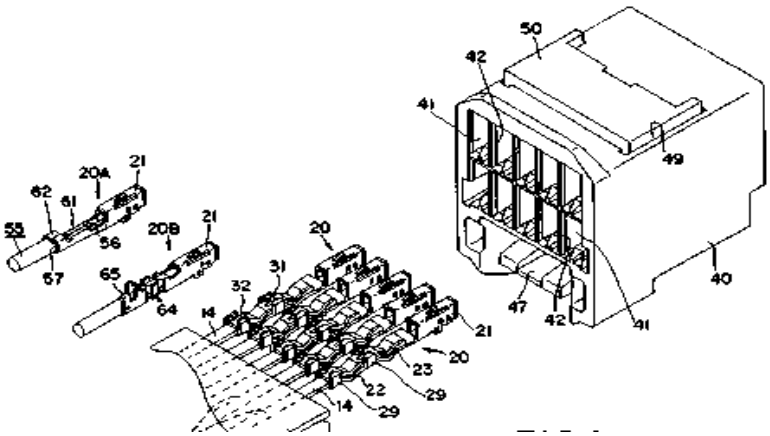

(US6375492B)

Title – H01R12/70

Coupling devices

Definition statement

This group covers:

Connection of printed circuit boards by connectors in a demountable manner (Example：EP178540A, WO96/7220A, WO94/24730A)

Special rules of classification within this group

When the identification of the subject of connection for the connector is not clear in the patent specification or drawings, classification is given in this subgroup too.

In the following classification, it should be noted that the subdivision is effected depending on the counterpart of the connection and on the subject of mounting of that connector which is one party having a character for classification.

Title – H01R12/71

For rigid printed circuits or like structures

Definition statement

This group covers:

Coupling device of which the subject of connection for the connector is rigid printed circuit board and that are not covered by H01R 12/72~12/75 (Example：US2004/0106326A1)

Title – H01R12/72

Coupling with the edge of the rigid printed circuits or like structures

Definition statement

This group covers:

Coupling device of which the subject of connection for the connector is provided at the edge of, or nearby place to the edge of, rigid printed circuit board, and the subject of mounting is either not rigid printed circuit board or unidentifiable (Example: EP1128489A, JP3-105882 A)

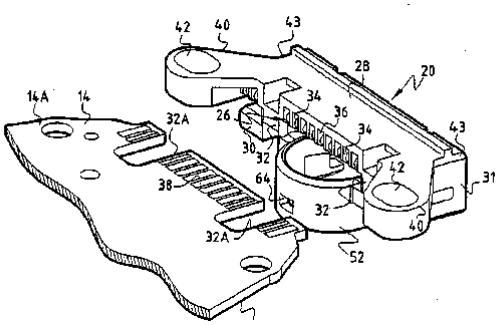

(EP1128489A)

Title – H01R12/73

Connecting to other rigid printed circuits or like structures

Definition statement

This group covers:

Coupling device of which the subject of connection for the connector is rigid printed circuit board, and the subject of mounting of the connector is also rigid printed circuit board (Example：WO96/11513A, JP10-507033A, US6293464B)

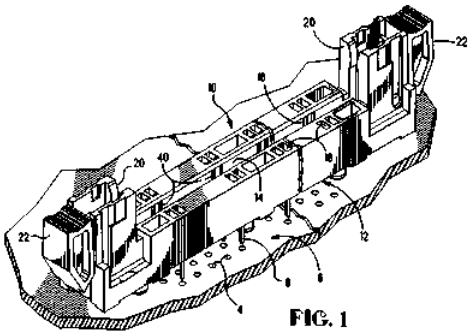

(WO96/11513A)

Title – H01R12/75

Connecting to cables except for flat or ribbon cables

Definition statement

This group covers:

Coupling device of which the subject of connection for the connector is cables, and the subject of mounting is rigid printed circuit board (Example: US5667401A, EP1065758A, JP9-129306A)

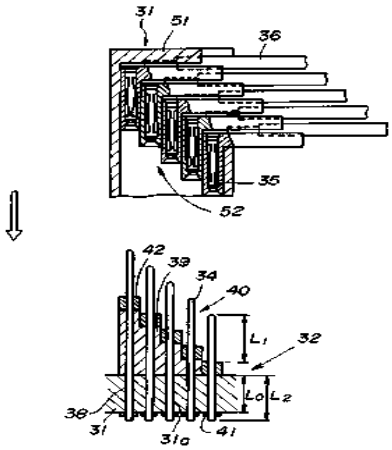

(US5667401A)

Title – H01R12/77

For flexible printed circuits, flat or ribbon cables or like structures

Definition statement

This group covers:

Coupling device of which the subject of connection for the connector is flexible printed circuit board, and that are not covered by H01R 12/78~12/81 (Example: JP2003-264021A, JP2000-294341A）

Title – H01R12/78

Connecting to other flexible printed circuits, flat or ribbon cables or like structures

Definition statement

This group covers:

Coupling device of which the subject of connection for the connector is flexible printed circuit board, and the subject of mounting is also flexible printed circuit board (Example: US5498169A)

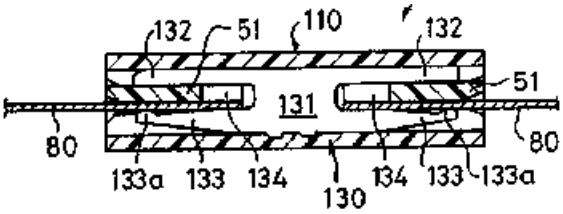

(US5498169A)

Title – H01R12/79

Connecting to rigid printed circuits or like structures

Definition statement

This group covers:

Coupling device of which the subject of connection for the connector is flexible printed circuit board, and the subject of mounting is rigid printed circuit board (Example: US2004/0002255A1, US6358089B)

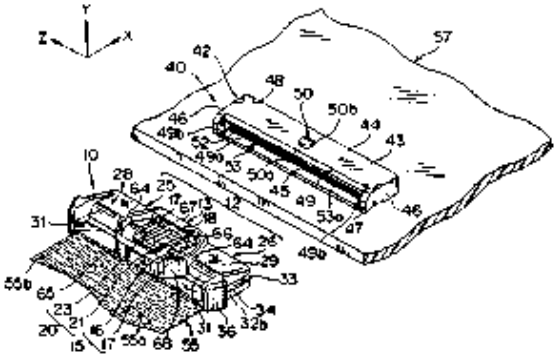

(US2004/0002255A1)

Title –H01R12/81

Connecting to another cable except for flat or ribbon cable

Definition statement

This group covers:

Coupling device of which the subject of connection for the connector is cables, and the subject of mounting is flexible printed circuit board (Example: EP948095A, US6139335A, GB2071930A)

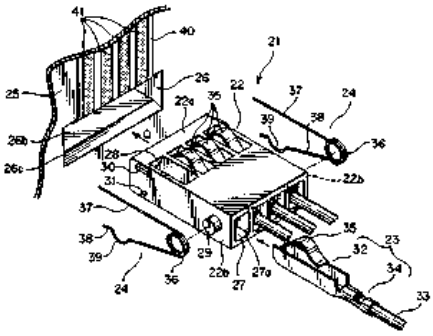

(EP948095A)

Title – H01R12/82

Connected with low or zero insertion force

Definition statement

This group covers:

A connector performing the connection by zero insertion force or low insertion force

Coupling device which has the order of insertion for instance or cannot be classified in H01R 12/83~12/89 (Example: US5775953A, EP1130690A, JP6-333648A)

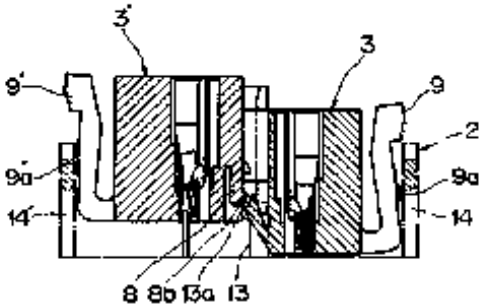

(US5775953A)

Title –H01R12/83

Connected with pivoting of printed circuits or like after insertion

Definition statement

This group covers:

Coupling device that is activated by pivoting motion after insertion of the subject of connection (Example：US5839913A, US6174187B, US4737120A)

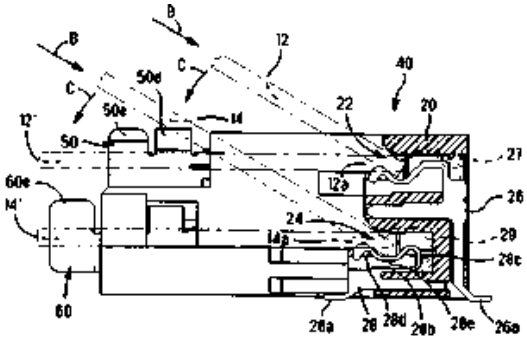

(US5839913A)

Title –H01R12/85

Contact pressure producing means, contacts activated after insertion of printed circuits or like structures

Definition statement

This group covers:

Coupling device that is activated by applying certain force on the contact by certain means, its using actuator or screw, etc. that is not classified in H01R 12/87~12/89.
(Example：US6210184B, JP11-126651A, JP7-45341A)

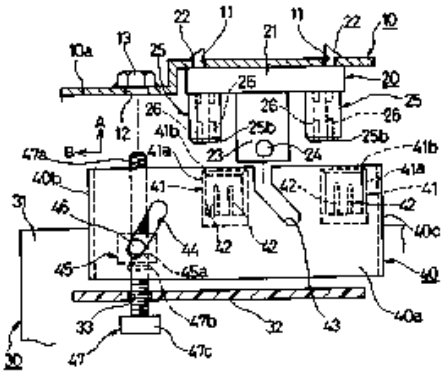

(US6210184B)

Title –H01R12/87

Acting automatically by insertion of rigid printed or like structures

Definition statement

This group covers:

Coupling device that can perform the connection of zero insertion force or low insertion force with only insertion of the subject of connection and without any other operation.
(Example：US5584708A, US6036519A, EP1009068A)

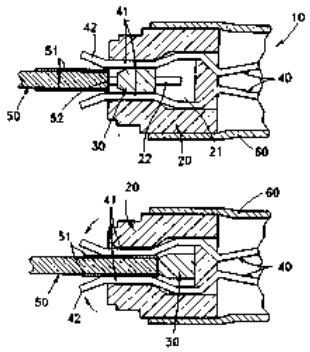

(US5584708A)

Title –H01R12/88

Acting manually by rotating or pivoting connector housing parts

Definition statement

This group covers:

Coupling device that can perform the connection of zero insertion force or low insertion force connection by activating pivoting member installed within the housing. If it is automatically functioning by the insertion of the subject of connection, it is classified in H01R 12/87.
(Example：US5904586A, US5795171A)

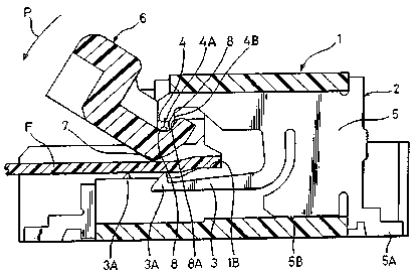

(US5904586A)

Title – H01R12/89

Acting manually by moving connector housing parts linearly e.g. slider

Definition statement

This group covers:

Coupling device that can perform the connection of zero insertion force or low insertion force connection by activating linear motion member installed within the housing. If it is automatically functioning by the insertion of the subject of connection, it is classified in H01R 12/87. (Example：US5921785A, US5839916A, JP2003-59560A)

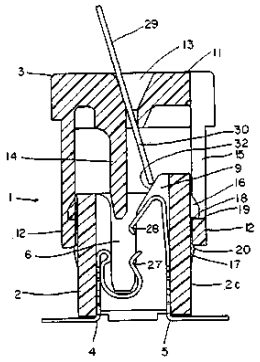

(US5921785A)

Title – H01R12/91

Allowing relative movement between coupling parts e.g. floating or self aligning

Definition statement

This group covers:

Coupling device of which connection is performed through automatic adjustment of the position between connectors to be connected (Example：US5306169A, EP1206007A, JP2004-214090A)

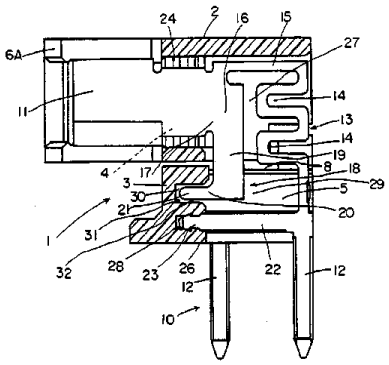

(US5306169A)

Principal Directorate Patent Grant Automation - Directorate Classification		
Project: **A020**	Electrical connectors	IPC range: **H01R 12**
Comment French Version		14 July 2009

Ref: A020-Annex 12, IB French version, 08-May-09

With regard to the French Version as proposed by the IB in Annex 12, EP notes that they basically support its contents, but would like to propose the following two corrections:

EN: adopt AL , N	*12/89*	. . . . *acting manually by moving connector housing parts linearly e.g. slider*		*agissant manuellement par déplacement linéaire des pièces du boîtier du connecteur, p.ex. coulisseau* ~~*autorisant un mouvement relatif entre*~~
EN: adopt AL , N	*12/91*	. . *allowing relative movement between coupling parts e.g. floating or self aligning*		*autorisant un mouvement relatif entre les pièces de couplage, p.ex. un flottement ou un auto-alignement*

Ruben de Bekker

Commentaires FR sur la version française du projet A020

Nous sommes d'accord avec les observations EP.

De plus,

H01R12/72 : en conformité avec la CIB, il faudrait remplacer ‘tranche’ par ‘bordure’.

JAPAN PATENT OFFICE November 6, 2009

Project: A020 Subclass: H01R

JP Rapporteur Report

JP posted the modified proposal of definitions for H01R 12/00 and subsequent subgroups as Annex 18 to the project file of A020 on 11 August 2009 and invited comments thereon with the time limit set on 25 September 2009. As there have been no comments posted to date, it is understood that there are no objections to nor any problem with the contents of the said proposal. JP as Rapporteur now believes that the adoption of these definitions will be decided at the coming IPC/WG22 (30 November - 4 December 2009).

In order to achieve the smooth adoption at the meeting, JP would be obliged if interested Offices would post expression of approval of the said modified proposal of definitions. When there happens to be any Office having adverse opinion or further modification proposal, it would be helpful to avoid unwished-for delay if such Office could post comments on the e-forum prior to the meeting.

In this connection, reference is made to Par 13 of “Procedures of Revision and Publication of the IPC” compiled at the 41st CE meeting (as appearing in Annex 20 of the project file of CE419), saying;
“Discussions on the IPC e-forum should be enhanced. These discussions should try to settle most of the substantive and technical issues prior to subsequent physical meeting of the IPC/WG.”

[END]

Rapporteur Summary

Project Number: A020
Rapporteur: JP
IPC: H01R 12/00-12/38
Subject: Electric connectors specially adapted for printed circuits (T044)

Scheme adopted		RCL	CRL	Definitions		Expected Date for completion of reclassification			Expected date entry into IPC
En	Fr			En	Fr	EP	JP	US	
Yes	Posted (Anx12,19, 20)	Yes	Yes	Posted (Anx18)			April 2011	End 2010	

1. Background/Summary

- English version of the scheme was adopted a the IPC/ALS/7 (25-27 February 2009).
- Anx 8 (26 March 2009) JP posted Initial Proposal - definitions.
- **Anx 12** (8 May 2009) IB posted Proposal - French version of the scheme.
- Anx 13 (4 June 2009) EP posted comment and presented amendment in respect of H01R 12/88 and 12/89.
- RCL and CRL were adopted at the IPC/RWG/21 (15-19 June 2009).
- Anx 16 (3 August 2009) IB posted Working Group decision.
- Anx 17 (11 August 2009) JP posted R report.
- **Anx 18** (11 August 2009) JP posted Modified Proposal - definitions accepting EP's remarks in Anx 13 and adding some illustrations.
- **Anx 19** (7 October 2009) EP posted comment and proposed amendment in respect of H01R 12/89 and 12/91 in IB's Proposal - French version of the scheme.
- **Anx 20** (4 November 2009) FR posted comment on French version of the scheme.
- Anx 21 (6 November 2009) JP posted R report and invited expression of approval to Modified Proposal - definitions in Anx 18 by Offices who have no objection thereto.

2. Discussion items for IPC/WG

- Adoption of English version of definitions (Anx 18)
- Adoption of French version of the scheme (Anx 12, 19, 20)

3. Future steps for completion

- French version of definitions is invited.

Principal Directorate Patent Grant Automation - Directorate Classification		
Project: **A020**	Electrical connectors	IPC range: **H01R 12**
Comment Definitions		20 Nov 2009

Ref: A020-Annex 18, R proposal definition, 11-Aug-09
A020-Annex 21, R Report, 06-Nov-09
A020-Annex 22, R summary for next WG, 17-Nov-09

Referring to Annex 18, 21 and 22:

EP thanks JP Rapporteur for the posting of the proposal of the definition of the current project.

EP realises that the addition of comments at such a late stage is not to be recommended. EP therefore apologises for the timing of this last minute posting of this comment.

Having said that, EP basically supports contents of the Definitions.
However, specialists of EP, in their last round of review, concluded that some issues were still open for improvement.
As a consequence, EP would like to propose (see text in green below) some changes of wording in the text under the "Glossary of Terms" under H01R 12/00 and under the "Definition statement" of the 12/52, to more clearly express its meaning.
In addition, EP is of the opinion that some alternative figures could better serve as examples to support the meaning of the subject-matter falling under H01R 12/67, 12/73 and the 12/91 (see examples marked with green interrupted lines in proposal below)

RdB

Title – H01R12/00

Structural associations of a plurality of mutually-insulated electrical connecting elements, specially adapted for printed circuits, e.g. printed circuit boards (PCBs), flat or ribbon cables, or like generally planar structures, e.g. terminal strips, terminal blocks; Coupling devices specially adapted for printed circuits, flat or ribbon cables, or like generally planar structures; Terminals specially adapted for contact with, or insertion into, printed circuits, flat or ribbon cables, or like generally planar structures

References relevant to classification in this group

This group does not cover:

Printed connections to, or between, printed circuits	H05K 1/11

Special rules of classification within this group

In this group, when it is called just a "connector", it is a connector which has a character for classification. When the connections are characterized by the connectors to be coupled of both parties, then the classification is given to each of both connectors.

When the counterpart of connection is identified, classification is given in H01R 12/70 and subsequent subgroups. On the other hand, if the subject of connection is not identified but only the mounting of the connector to a printed circuit board is suggested, classification is given in H01R 12/55~12/58,12/65~12/69 and H01R 12/70.

Glossary of Terms

Hereafter, in this group, the following term is used in the sense of the following.

A rigid printed circuit board: A substrate comprising conductive paths and terminals for connection to other devices, the substrate being rigid with limited bending capability.~~A rigid printed circuit board (PCB) and a rigid case which contains printed circuit and has external electric terminals on the outside part of it, and a card, such as a PC card, is included.~~

A flexible printed circuit board: A flexible substrate comprising conductive paths, flat flexible structures with electrically conductive properties like flat or ribbon cables. ~~It is a printed circuit board which has flexibility, and a flat or a ribbon cable is included.~~

~~**Printing**~~ **Printed circuit board**: Both of the above "a rigid printed circuit board" and "a flexible printed circuit board"

Printing wiring board: synonym for printed circuit board

Terminal: Means for electric connection ~~Conductive part material sets as the object of electric connection~~

Connector: Structure containing terminals for a removable connection.~~Conductive terminals surrounded by an insulating housing used for male - female coupling.~~ Simple "terminal" without a housing ~~which does not have housing~~ is not included.

Direct connection: Irremovable connection of terminals using solder, adhesive, welding, insulation displacement edge, a rivet, a screw, etc.

Title – H01R12/50

Fixed connections

Definition statement

This group covers:

Fixed connection between a plurality of printed circuit boards.

Title – H01R12/51

For rigid printed circuits or like structures

Definition statement

This group covers:

Fixed connection of which one party is a rigid printed circuit board

Fixed connection for members (e.g. connectors) to rigid printed circuit board by other structures than terminals (e.g. housing) that are not covered by H01R 12/52~12/58

Special rules of classification within this group

Those characterized by the terminals are classified in H01R 12/55~12/58.

Title – H01R12/52

Connecting to other rigid printed circuits or like structures

Definition statement

This group covers:

Fixed connection of which both of the connecting parties are rigid printed circuit board (Example: US5984692A, WO99/44260A)

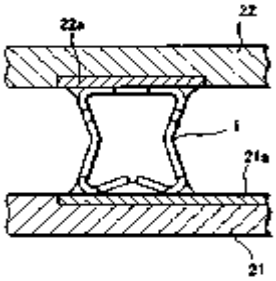

（US5984692A）

Title –H01R12/53

Connecting to cables except for flat or ribbon cables

Definition statement

This group covers:

Fixed connection for cables mounted on rigid printed circuit board, the cable having a circular or similar cross section. ~~When a cable is a~~ Connections with flat or a ribbon cables are ~~, it is~~ classified in H01R12/62. (Example: US5667390A, EP1246309A)

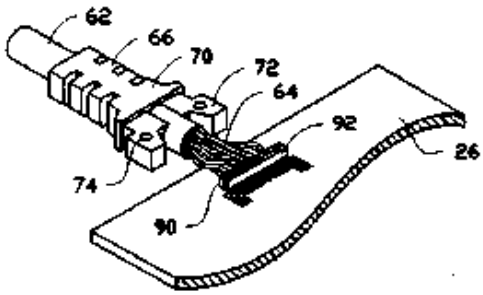

(US5667390A)

Title – H01R12/55

Characterized by the terminals

Definition statement

This group covers:

Fixed connection for terminals to the rigid printed circuit board characterized by the shape or the mounting means of terminals, e.g. edge contact, including mounting of connectors to the printed circuit board (Example: EP178540A, JP2001-237008A)

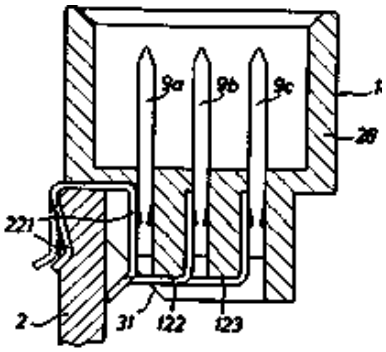

(EP178540A)

Title – H01R12/57

Surface mounting terminals

Definition statement

This group covers:

Fixed connection for terminals (including terminals of the connector) mounted directly on the rigid printed circuit board by using soldering, etc. (Example: EP1473802A, US6623283B, WO95/10865A)

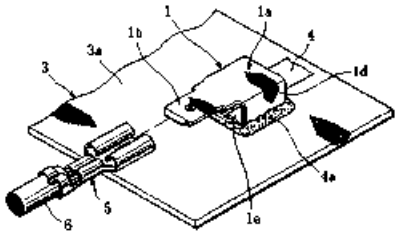

(EP1473802A)

Title –H01R12/58

Terminals for insertion into holes

Definition statement

This group covers:

Fixed connection for terminals (including terminals of the connector) inserted into holes that are provided on rigid printed circuit board (Example: WO94/24730A, EP499431A, WO96/7220A)

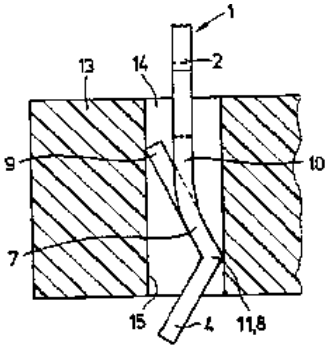

(WO94/24730A)

Title – H01R12/59

For flexible printed circuits, flat or ribbon cables or like structures

Definition statement

This group covers:

Fixed connection of which one party is flexible printed circuit board

Fixed connection for members (e.g. connectors) to flexible printed circuit board by other structures than terminals (e.g. housing) that are not covered by H01R 12/61~12/69

(Example: JP2000-294314A)

Special rules of classification within this group

Those characterized by the connection of terminals are classified in H01R 12/65~12/69.

Title – H01R12/61

Connecting to flexible printed circuits, flat or ribbon cables or like structures

Definition statement

This group covers:

Fixed connection directly connecting between flexible printed circuit boards (Example: US2002/0028598A1, US2003/0098342A1, US2002/0092666A1)

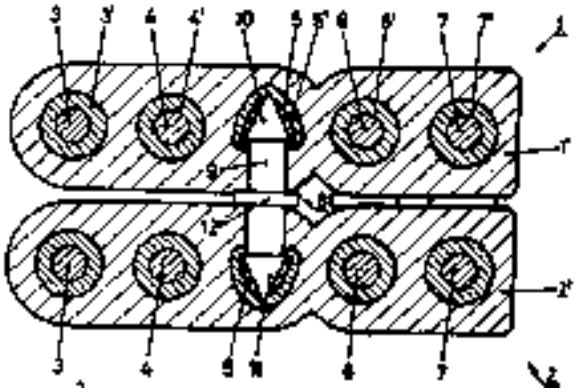

(US2002/0028598A1)

Title – H01R12/62

Connecting to rigid printed circuits or like structures

Definition statement

This group covers:

Fixed connection directly connecting between flexible printed circuit board and rigid printed circuit board (Example: US2002/0004341A1)

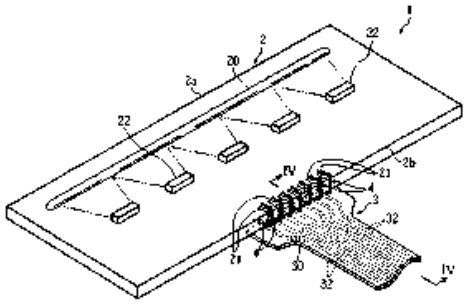

(US2002/0004341A1)

Title – H01R12/63

Connecting to another shape cable

Definition statement

This group covers:

Fixed connection for cables directly mounted on flexible printed circuit board (Example: EP1035616A, EP698943A, JP2001-313457A)

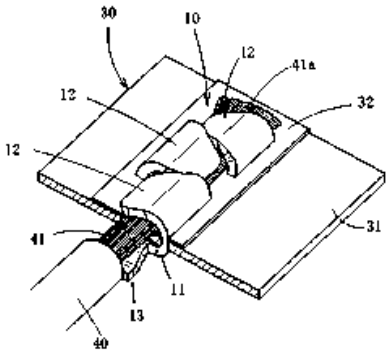

(EP1035616A)

Title – H01R12/65

Characterized by the terminal

Definition statement

This group covers:

Fixed connection characterized by the terminals directly mounted on flexible printed circuit board, e.g. edge contact (Examples: US2001/0019918A1, JP11-329533A)

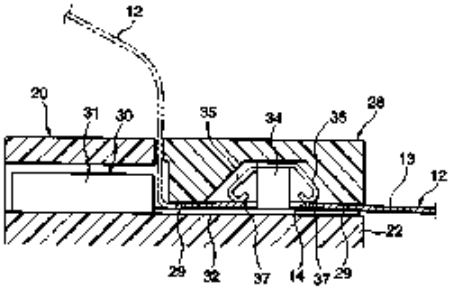

(US2001/0019918A1)

Title – H01R12/67

Insulation penetrating terminals

Definition statement

This group covers:

Fixed connection by terminals penetrating the flexible printed circuit board e.g. insulation displacement terminal (Example：EP932221A, US2002/0076969A1, US2002/0028598A1)

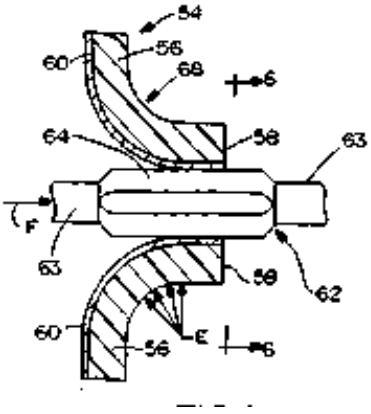

(EP932221A)

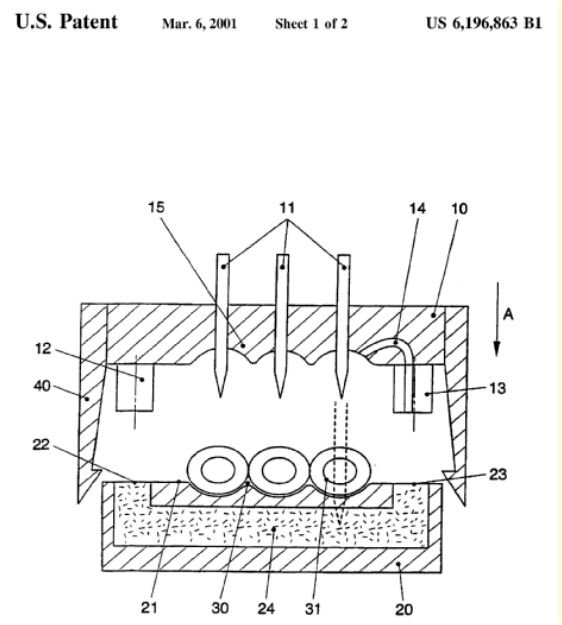

Title – H01R12/68

Comprising deformable portions

Definition statement

This group covers:

Fixed connection by terminals that are secured to the conducting body after penetrating and bending and connected to flexible printed circuit board (Example：US2003/0106211A1, US2001/0014553A1)

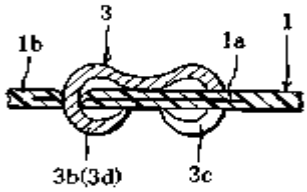

(US2003/0106211A1)

Title – H01R12/69

Deformable terminals e.g. crimping terminals

Definition statement

This group covers:

Fixed connection by partially deformed terminals connected to conductors of flexible printed circuit board e.g. Crimping terminals Excluding those penetrating the flexible printed circuit boardH01R 12/67,68 (Example：US6375492B, JP2002-184246A, JP10-021979A）

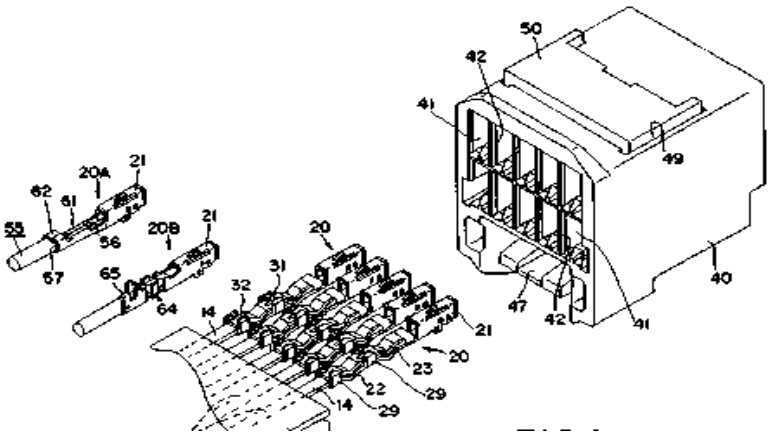

(US6375492B)

Title – H01R12/70

Coupling devices

Definition statement

This group covers:

Connection of printed circuit boards by connectors in a demountable manner (Example: EP178540A, WO96/7220A, WO94/24730A)

Special rules of classification within this group

When the identification of the subject of connection for the connector is not clear in the patent specification or drawings, classification is given in this subgroup too.

In the following classification, it should be noted that the subdivision is effected depending on the counterpart of the connection and on the subject of mounting of that connector which is one party having a character for classification.

Title – H01R12/71

For rigid printed circuits or like structures

Definition statement

This group covers:

Coupling device of which the subject of connection for the connector is rigid printed circuit board and that are not covered by H01R 12/72~12/75 (Example : US2004/0106326A1)

Title – H01R12/72

Coupling with the edge of the rigid printed circuits or like structures

Definition statement

This group covers:

Coupling device of which the subject of connection for the connector is provided at the edge of, or nearby place to the edge of, rigid printed circuit board, and the subject of mounting is either not rigid printed circuit board or unidentifiable (Example: EP1128489A, JP3-105882 A)

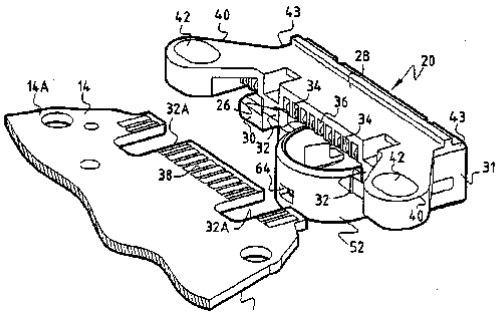

(EP1128489A)

Title – H01R12/73

Connecting to other rigid printed circuits or like structures

Definition statement

This group covers:

Coupling device of which the subject of connection for the connector is rigid printed circuit board, and the subject of mounting of the connector is also rigid printed circuit board (Example：WO96/11513A, JP10-507033A, US6293464B)

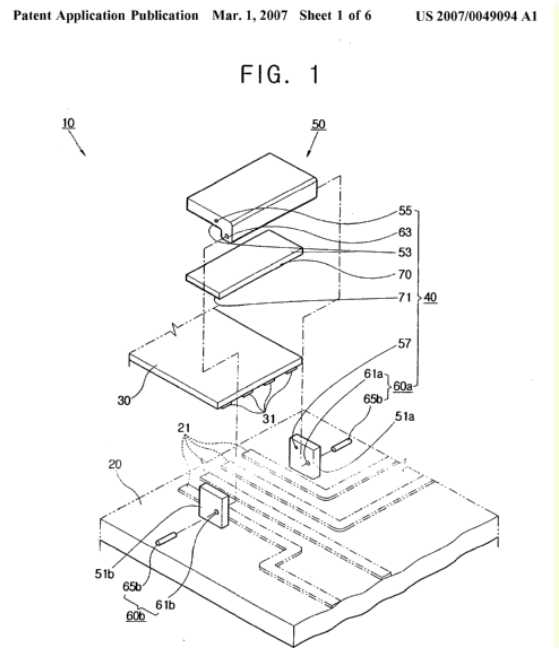

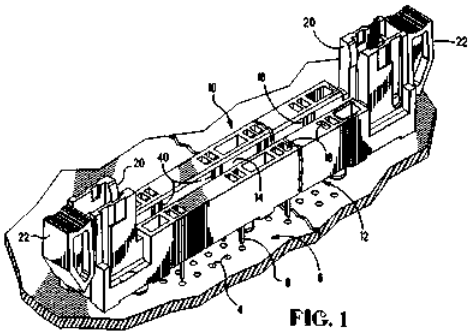

(WO96/11513A)

Title – H01R12/75

Connecting to cables except for flat or ribbon cables

Definition statement

This group covers:

Coupling device of which the subject of connection for the connector is cables, and the subject of mounting is rigid printed circuit board (Example: US5667401A, EP1065758A, JP9-129306A)

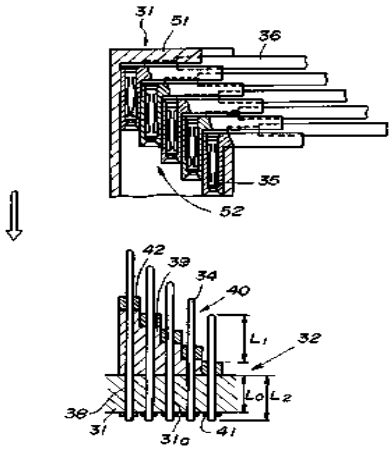

(US5667401A)

Title – H01R12/77

For flexible printed circuits, flat or ribbon cables or like structures

Definition statement

This group covers:

Coupling device of which the subject of connection for the connector is flexible printed circuit board, and that are not covered by H01R 12/78~12/81 (Example: JP2003-264021A, JP2000-294341A）

Title – H01R12/78

Connecting to other flexible printed circuits, flat or ribbon cables or like structures

Definition statement

This group covers:

Coupling device of which the subject of connection for the connector is flexible printed circuit board, and the subject of mounting is also flexible printed circuit board (Example: US5498169A)

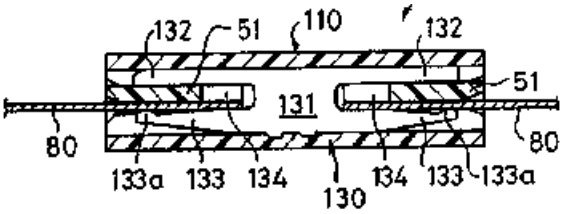

(US5498169A)

Title – H01R12/79

Connecting to rigid printed circuits or like structures

Definition statement

This group covers:

Coupling device of which the subject of connection for the connector is flexible printed circuit board, and the subject of mounting is rigid printed circuit board (Example: US2004/0002255A1, US6358089B)

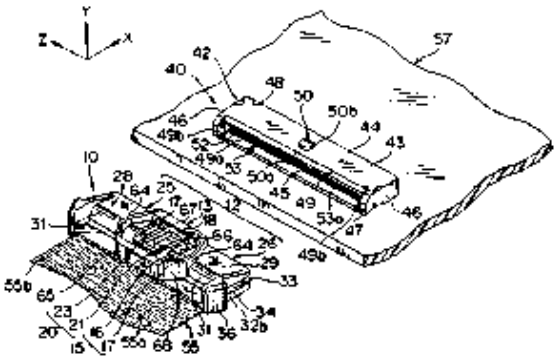

(US2004/0002255A1)

Title –H01R12/81

Connecting to another cable except for flat or ribbon cable

Definition statement

This group covers:

Coupling device of which the subject of connection for the connector is cables, and the subject of mounting is flexible printed circuit board (Example: EP948095A, US6139335A, GB2071930A)

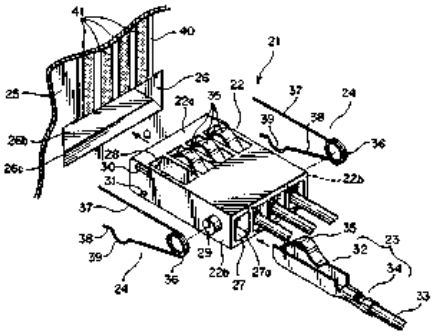

(EP948095A)

Title – H01R12/82

Connected with low or zero insertion force

Definition statement

This group covers:

A connector performing the connection by zero insertion force or low insertion force

Coupling device which has the order of insertion for instance or cannot be classified in H01R 12/83~12/89 (Example: US5775953A, EP1130690A, JP6-333648A)

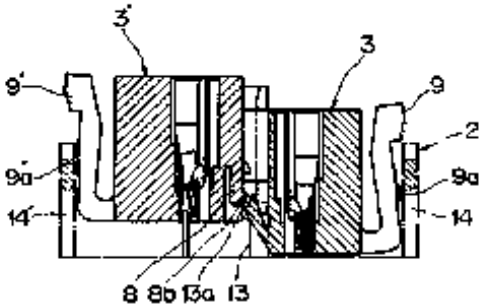

(US5775953A)

Title –H01R12/83

Connected with pivoting of printed circuits or like after insertion

Definition statement

This group covers:

Coupling device that is activated by pivoting motion after insertion of the subject of connection (Example：US5839913A, US6174187B, US4737120A)

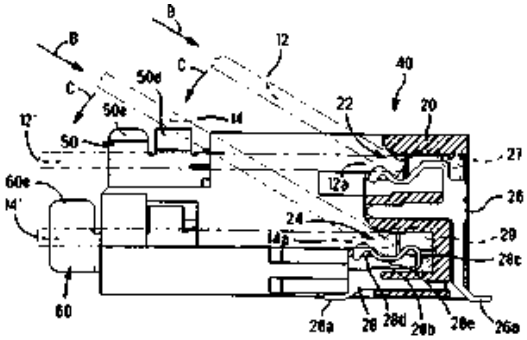

(US5839913A)

Title –H01R12/85

Contact pressure producing means, contacts activated after insertion of printed circuits or like structures

Definition statement

This group covers:

Coupling device that is activated by applying certain force on the contact by certain means, its using actuator or screw, etc. that is not classified in H01R 12/87~12/89.
(Example：US6210184B, JP11-126651A, JP7-45341A)

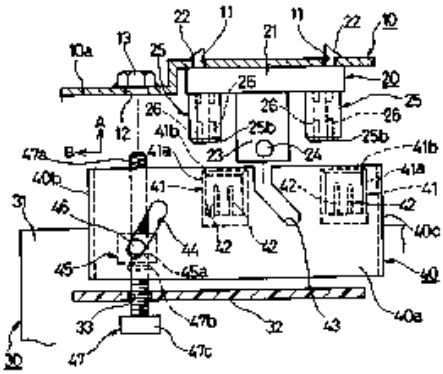

(US6210184B)

Title –H01R12/87

Acting automatically by insertion of rigid printed or like structures

Definition statement

This group covers:

Coupling device that can perform the connection of zero insertion force or low insertion force with only insertion of the subject of connection and without any other operation.
(Example：US5584708A, US6036519A, EP1009068A)

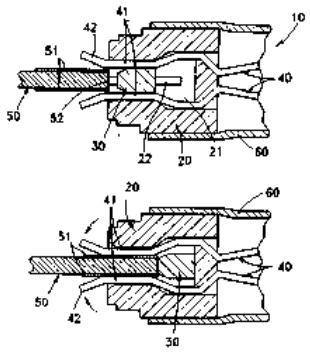

(US5584708A)

Title –H01R12/88

Acting manually by rotating or pivoting connector housing parts

Definition statement

This group covers:

Coupling device that can perform the connection of zero insertion force or low insertion force connection by activating pivoting member installed within the housing. If it is automatically functioning by the insertion of the subject of connection, it is classified in H01R 12/87.
(Example：US5904586A, US5795171A)

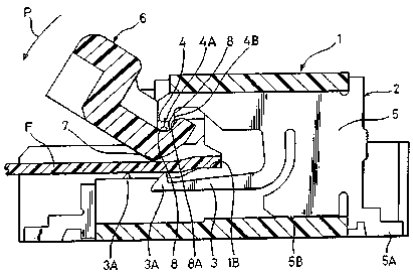

(US5904586A)

Title – H01R12/89

Acting manually by moving connector housing parts linearly e.g. slider

Definition statement

This group covers:

Coupling device that can perform the connection of zero insertion force or low insertion force connection by activating linear motion member installed within the housing. If it is automatically functioning by the insertion of the subject of connection, it is classified in H01R 12/87. (Example：US5921785A, US5839916A, JP2003-59560A)

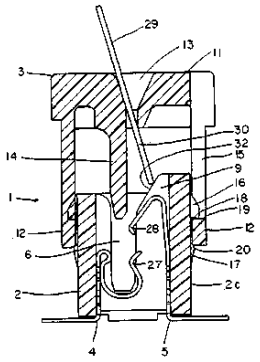

(US5921785A)

Title – H01R12/91

Allowing relative movement between coupling parts e.g. floating or self aligning

Definition statement

This group covers:

Coupling device of which connection is performed through automatic adjustment of the position between connectors to be connected (Example：US5306169A, EP1206007A, JP2004-214090A)

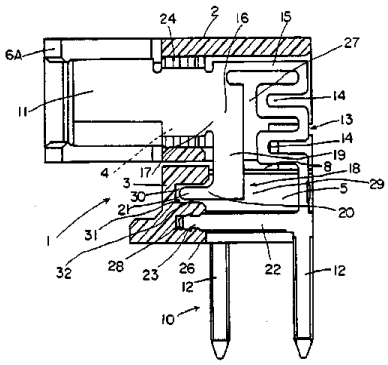

(US5306169A)

Patent Application Publication Sep. 24, 2009 Sheet 2 of 6 US 2009/0239422 A1

FIG. 2

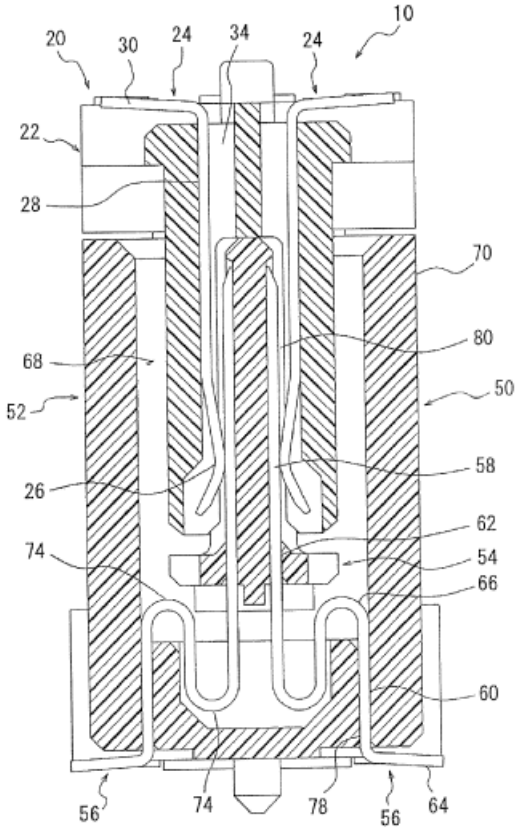

JAPAN PATENT OFFICE November 25, 2009

Project: A020 Subclass: H01R

Comment

JP thanks EP colleagues for the valuable response to our Proposal - definitions (Annex 18). JP can support EP proposals in respect of certain terms in the Glossary of Terms for H01R 12/00 and of Definition statement for H01R 12/53 (not 12/52).

JP also agrees with replacing the figures for H01R 12/67 and 12/91 from JP-proposed ones to the EP-selected alternatives. (As to the figure for 12/91, it may well be acceptable to use both JP and EP-proposed ones, i.e. to exhibit two figures for the one subgroup 12/91.)

However, as to the figure for 12/73, JP considers that the EP-proposed alternative is not preferable for the reason stated below and that the JP-proposed figure in Annex 18 should be used. That is, the EP-proposed Fig.1 from US2007/0049094A1 can be understood as displaying a fixed connection between the first contact 21 of the first substrate 20 and the second contact 31 of the second substrate 30, but is not showing a typical coupling device. JP is afraid that the entry thereof in the definition of H01R 12/00 and its subgroups might lead to some misunderstanding.

[END]

IPC/A 021
ORIGINAL: English/French
DATE: 25.11.2009

WORLD INTELLECTUAL PROPERTY ORGANIZATION
ORGANISATION MONDIALE DE LA PROPRIÉTÉ INTELLECTUELLE

GENEVA/GENÈVE

COMMITTEE OF EXPERTS OF THE IPC UNION
COMITÉ D'EXPERTS DE L'UNION DE L'IPC

AL REVISION PROJECT FILE
DOSSIER DE PROJET RÉVISION NIVEAU ÉLEVÉ

PROPOSAL BY : **AP** **PROPOSITION DE :**	**IPC AREA:** **H01R 13/00** **DOMAINE DE LA CIB :**
RAPPORTEUR : **US**	**TECHNICAL FIELD :** **E** **DOMAINE TECHNIQUE :**

ANNEX/ ANNEXE	CONTENT/CONTENU		ORIGIN/ ORIGINE	DATE
1	Decision of the subcommittee	Décision du cous-comité	IB	18.12.2008
2	Revision request with proposal	Demande de révision avec proposition	US	19.12.2008
3	Comments	Observations	JP	24.12.2008
4	Comments	Observations	IB	04.02.2009
5	Rapporteur summary for the next ALS		US	06.02.2009
6	Comments	Observations	US	18.02.2009
7	Technical Annexes		IB	18.02.2009
8	Decision of the subcommittee	Décision du cous-comité	IB	24.03.2009
9	Rapporteur report	Rapport du rapporteur	US	05.05.2009
10	Proposal - scheme	Proposition - schéma	US	05.05.2009
11	French version	Version française	IB	11.06.2009
12	Working Group decision	Décision du groupe de travail	IB	03.08.2009
13	List of cross references	Liste des renvois	IB	31.08.2009
14	Rapporteur report	Rapport du rapporteur	US	24.09.2009
15	Proposal - scheme	Proposition - schéma	US	24.09.2009
16	Proposal - definitions	Proposition - définitions	US	24.09.2009

ANNEX/ ANNEXE	CONTENT/CONTENU		ORIGIN/ ORIGINE	DATE
17	Proposal - RCL	Proposition - RCL	US	24.09.2009
18	Comments - French version	Observations - Version française	EP	07.10.2009
19	Comments - French version	Observations - Version française	FR	04.11.2009
20	Comments - French version	Observations - Version française	EP	13.11.2009
21	Proposal - scheme	Proposition - schéma	US	25.11.2009
22	Proposal - definitions	Proposition - définitions	US	25.11.2009

ANNEXE 1E,F H01R [Projet-Rapporteur : A021/US] <WG21>

EN: 13/646 AL , C	· *Special adaptation for high-frequency, e.g. structures providing an impedance match or phase match*	*Adaptation particulière à la haute fréquence, p.ex. structures procurant une adaptation d'impédance ou un accord de phase*
EN: 13/6461 AL , N	· · *Means for preventing cross talk*	*Moyens pour empêcher la diaphonie*
EN: 13/6463 AL , N	· · · *using twisted pair of wires*	*utilisant une paire torsadée de fils*
EN: 13/6464 AL , N	· · · *by adding capacitive element*	*en ajoutant un élément capacitif*
EN: 13/6466 AL , N	· · · · *on substrate, e.g. PCB [Printed Circuit Board]*	*sur un substrat, p.ex. une carte de circuits imprimés*
EN: 13/6467 AL , N	· · · *by cross-over of signal conductors*	*par croisement de conducteurs de signaux*
EN: 13/6469 AL , N	· · · · *on substrate*	*sur un substrat*
EN: 13/6471 AL , N	· · · *by special arrangement of ground and signal conductors, e.g. GSGS [Ground-Signal-Ground-Signal]*	*par agencement particulier des conducteurs de mise à la terre et de signaux, p.ex. GSGS [signal de mise à la terre -- signal de mise à la terre]*
EN: 13/6473 AL , N	· · *Impedance matching*	*Adaptation d'impédance*
EN: 13/6474 AL , N	· · · *by variation of conductive element*	*par variation de l'élément conducteur*
EN: 13/6476 AL , N	· · · · *by making an aperture, e.g. hole*	*en pratiquant une ouverture, p.ex. un trou*
EN: 13/6477 AL , N	· · · *by variation of dielectric property*	*par variation des propriétés diélectriques*
EN: 13/6479 AL , N	· · · · *by making an aperture, e.g. hole*	*en pratiquant une ouverture, p.ex. un trou*
EN: 13/658 CL , M	· · High frequency shielding arrangements, e.g. EMI [Electro-Magnetic Interference] or EMP [Electro-Magnetic Pulse] proof	Dispositions pour le blindage en haute fréquence, p.ex. protection contre les parasites électromagnétiques ou les impulsions électromagnétiques
EN: 13/6581	· · · *Structure of shield*	*Structure du blindage*

AL , N			
EN: 13/6582 AL , N	. . . .	*with resilient means for engaging mating connector*	*avec des moyens élastiques destinés à venir en contact avec le connecteur homologue*
EN: 13/6583 AL , N	. . . . .	*with separate conductive resilient member between mating shield members*	*avec un organe élastique conducteur indépendant entre les organes de blindage homologues*
EN: 13/6584 AL , N	. . . . .	*formed by conductive elastomeric member, i.e. flat gasket or O-ring*	*formé par un organe élastomère conducteur, p.ex. un joint plat ou un joint torique*
EN: 13/6585 AL , N	. . . .	*Shielding material individually surrounding or interposed between mutually spaced contacts*	*Matériau de blindage entourant individuellement des contacts espacés les uns des autres ou interposé entre ces derniers*
EN: 13/6586 AL , N	. . . . .	*for separating multiple connector modules*	*pour séparer des modules de connecteurs multibroches*
EN: 13/6587 AL , N	. . . . .	*for mounting on PCB*	*pour montage sur une carte de circuits imprimés*
EN: 13/6588 AL , N	. . . . .	*Shield with through openings for individual contacts*	*Blindage à ouvertures débouchantes pour contacts individuels*
EN: 13/6589 AL , N	. . . . .	*with conductive housing part separating wires*	*avec partie boîtier conductrice séparant les fils*
EN: 13/659 AL , N	. . . .	*Shield with plural ports for distinct connectors*	*Blindage muni de plusieurs orifices pour connecteurs distincts*
EN: 13/6591 AL , N	. . .	*Specific features or arrangements of connection of shield to conductive member*	*Caractéristiques ou dispositions spécifiques de raccordement du blindage à l'organe conducteur*
EN: 13/6592 AL , N	. . . .	*to shielded cable*	*à un câble blindé*
EN: 13/6593 AL , N	. . . . .	*Shield composed of different pieces*	*Blindage composé de différentes pièces*
EN: 13/6594 AL , N	. . . .	*Shield mounted on printed circuit board and connected to conductive member*	*Blindage monté sur une carte de circuits imprimés et raccordé à l'organe conducteur*
EN: 13/6595 AL , N	. . . . .	*with separate member fixing shield to PCB*	*avec élément séparé fixant le blindage à la carte de circuits imprimés*
EN: 13/6596 AL , N	. . . .	*to metal grounding panel*	*à un panneau métallique de mise à la terre*
EN: 13/6597	. . . .	*to contact of the connector*	*à un contact du connecteur*

AL , N		
EN: 13/6598 AL , N	· · · *Material of shield*	*Matériau du blindage*
EN: 13/6599 AL , N	· · · · *Conductive or dielectric material*	*Matériau conducteur ou diélectrique*
EN: 13/684 AL , N	· · · *Removable fuse*	*Fusible amovible*
EN: 13/688 AL , N	· · · · *with housing part adapted for accessing the fuse*	*avec partie boîtier adaptée pour accéder au fusible*
EN: 13/692 AL , N	· · · · · *Turnable housing part*	*Partie boîtier susceptible de rotation*
EN: 13/696 AL , N	· · · *Integral with the terminal, e.g. pin or socket*	*Solidaire de la borne, p.ex. broche ou douille*
EN: 13/717 AL , M	· · with built-in light source	*avec source lumineuse intégrée*
EN: 13/7193 AL , N	· · · *Ferrite filter*	*Filtre en ferrite*
EN: 13/7195 AL , N	· · · *Planar filter with opening for contacts*	*Filtre plan avec ouverture pour les contacts*
EN: 13/7197 AL , N	· · · *Filter integral with or fitted onto contact, e.g. tubular filter*	*Filtre solidaire du contact ou monté sur ce dernier, p.ex. filtre tubulaire*

Schéma existant pour aide à la traduction.

H01R 13/00	**Details of coupling devices of the kinds covered by groupsH01R 12/14 or H01R 24/00-H01R 33/00 [1,7]**	**Détails de dispositifs de couplage des types couverts par les groupes H01R 12/14 ou H01R 24/00-H01R 33/00 [1,7]**	
H01R 13/02	· Contact members	Contacts	
H01R 13/03	· · characterised by the **material**, e.g. plating or coating **materials** **[4]**	caractérisés par le **matériau**, p.ex. matériaux de plaquage ou de revêtement **[4]**	
H01R 13/04	· · Pins or blades for co-operation with sockets	Broches ou lames destinées à coopérer avec des alvéoles	
H01R 13/05	· · · Resilient pins or blades (carrying separate resilient parts **H01R 13/15**) **[3]**	Fiches ou lames élastiques (comportant des parties élastiques séparées**H01R 13/15**) **[3]**	
H01R 13/08	· · · Resiliently-mounted rigid pins or blades	Broches ou lames rigides montées élastiquement	
H01R 13/10	· · Sockets for co-operation with pins or blades	Alvéoles destinés à coopérer avec des broches ou lames	
H01R 13/11	· · · Resilient sockets (carrying	Alvéoles élastiques (comportant des	

		separate resilient parts **H01R 13/15**) **[3]**	parties élastiques séparées **H01R 13/15**) **[3]**
H01R 13/115	· · · ·	U-shaped sockets having inwardly-bent legs **[3]**	Alvéoles en forme de U comportant des branches recourbées intérieurement **[3]**
H01R 13/14	· · ·	Resiliently-mounted rigid sockets	Alvéoles rigides montés élastiquement
H01R 13/15	· ·	Pins, blades or sockets having separate spring member for producing or increasing contact pressure **[3]**	Broches, lames ou alvéoles ayant un ressort indépendant pour produire ou améliorer la pression de contact **[3]**
H01R 13/17	· · ·	the spring member being on the pin **[3]**	le ressort étant sur la broche **[3]**
H01R 13/18	· · ·	with the spring member surrounding the socket	le ressort entourant l'alvéole
H01R 13/187	· · ·	the spring member being in the socket **[3]**	le ressort étant dans l'alvéole **[3]**
H01R 13/193	· ·	Means for increasing contact pressure at the end of engagement of coupling part **[3]**	Moyens pour améliorer la pression de contact à la fin de l'engagement des pièces de couplage **[3]**
H01R 13/20	· ·	Pins, blades, or sockets shaped, or provided with separate member, to retain co-operating parts together	Broches, lames ou alvéoles conformés ou ayant une pièce séparée en vue de retenir ensemble les parties en fonctionnement
H01R 13/207	· · ·	by screw-in connection **[3]**	par connexion vissée **[3]**
H01R 13/213	· · ·	by bayonet connection **[3]**	par connexion à baïonnette **[3]**
H01R 13/22	· ·	Contacts for co-operating by abutting	Contacts pour coopération par aboutage
H01R 13/24	· · ·	resilient; resiliently mounted	élastiques; montés élastiquement
H01R 13/26	· ·	Pin or blade contacts for sliding co-operation on one side only	Broches ou lames de contact pour coopération par glissement sur un seul côté
H01R 13/28	· ·	Contacts for sliding co-operation with identically-shaped contact, e.g. for hermaphroditic coupling devices	Contacts destinés à coopérer par glissement avec un contact de forme identique, p.ex. pour des dispositifs de couplage hermaphrodites
H01R 13/33	· ·	Contact members made of resilient wire **[3]**	Pièces de contact faites de fil souple **[3]**
H01R 13/35	· ·	for non-simultaneous co-operation with different types of contact member, e.g. socket co-operating with either round or flat pin **[3]**	conçues pour une coopération non simultanée avec différents types de pièces de contact, p.ex. alvéole coopérant soit avec une broche ronde soit avec une broche plate **[3]**
H01R 13/40	·	Securing contact members in or to a base or case; Insulating of contact members	Fixation des pièces de contact dans ou sur un socle ou un boîtier; Isolement des pièces de contact
H01R 13/405	· ·	Securing in non-demountable manner, e.g. moulding, riveting **[3]**	Fixation d'une manière non démontable, p.ex. par moulage, rivetage **[3]**
H01R 13/41	· · ·	by frictional grip in grommet, panel or base **[3]**	par engagement à frottement dans une rondelle isolante, un panneau ou une base **[3]**
H01R 13/415	· · ·	by permanent deformation of contact member **[3]**	par déformation permanente de la pièce de contact **[3]**
H01R 13/42	· ·	Securing in a demountable manner	Fixation de manière démontable
H01R 13/422	· · ·	in resilient one-piece base or case; One-piece base or case formed with resilient locking means **[3]**	sur un socle ou dans un boîtier flexible en une seule pièce; Socle ou boîtier en une seule pièce comportant des moyens de verrouillage élastiques **[3]**
H01R 13/424	· · ·	in base or case composed of a plurality of insulating parts having at least one resilient insulating part **[3]**	sur un socle ou dans un boîtier composé de plusieurs pièces isolantes dont l'une au moins est flexible **[3]**
H01R 13/426	· · ·	by separate resilient retaining piece supported by base or case, e.g. collar **[3]**	par un dispositif de retenue indépendant et élastique porté par le socle ou par le boîtier, p.ex. par un collier **[3]**
H01R 13/428	· · ·	by resilient locking means on the contact members; by locking means on resilient contact members **[3]**	par des moyens de verrouillage élastiques situés sur les pièces de contact; par des moyens de verrouillage situés sur des pièces de contact élastiques **[3]**

H01R 13/432	· · · · by stamped-out resilient tongue snapping behind shoulder in base or case **[3]**	par une lame élastique emboutie à enclenchement brusque derrière un épaulement du socle ou du boîtier **[3]**
H01R 13/434	· · · · by separate resilient locking means on contact member, e.g. retainer collar or ring around contact member **[3]**	par des moyens de verrouillage élastiques indépendants situés sur une pièce de contact, p.ex. par un collier de retenue ou un anneau situé autour de la pièce de contact **[3]**
H01R 13/436	· · · Securing a plurality of contact members by one locking piece **[3]**	Fixation de plusieurs pièces de contact par une seule pièce de verrouillage **[3]**
H01R 13/44	· Means for preventing access to live contacts	Moyens pour empêcher l'accès aux contacts actifs
H01R 13/443	· · Dummy plugs **[7]**	Fiches factices **[7]**
H01R 13/447	· · Shutter or cover plate **[3]**	Volet ou plaque de recouvrement **[3]**
H01R 13/453	· · · Shutter or cover plate opened by engagement of counterpart **[3]**	Volet ou plaque de recouvrement ouvert par l'engagement de la pièce complémentaire **[3]**
H01R 13/46	· Bases; Cases	Socles; Boîtiers
H01R 13/50	· · formed as an integral body (**H01R 13/514** takes precedence) **[3]**	formés comme un corps intégré (**H01R 13/514** a priorité) **[3]**
H01R 13/502	· · composed of different pieces (**H01R 13/514** takes precedence) **[3]**	composés de différentes pièces (**H01R 13/514** a priorité) **[3]**
H01R 13/504	· · · different pieces being moulded, cemented, welded, e.g. ultrasonic, or swaged together **[3]**	les différentes pièces étant moulées, collées, soudées, p.ex. par soudage à ultrasons, ou réunies par estampage **[3]**
H01R 13/506	· · · assembled by snap action of the parts **[3]**	assemblées par enclenchement réciproque des pièces **[3]**
H01R 13/508	· · · assembled by clip or spring **[3]**	assemblées par une bride ou par un ressort **[3]**
H01R 13/512	· · · assembled by screw or screws **[3]**	assemblées par une vis ou par des vis **[3]**
H01R 13/514	· · formed as a modular block or assembly, i.e. composed of co-operating parts provided with contact members or holding contact members between them **[3]**	formés comme un bloc ou un assemblage modulaire, c. à d. composés de parties coopérantes pourvues de pièces de contact ou maintenant entre elles des pièces de contact **[3]**
H01R 13/516	· · Means for holding or embracing insulating body, e.g. casing **[3]**	Moyens pour maintenir ou envelopper un corps isolant, p.ex. boîtier **[3]**
H01R 13/518	· · · for holding or embracing several coupling parts, e.g. frames **[3]**	pour maintenir ou envelopper plusieurs pièces de couplage, p.ex. châssis **[3]**
H01R 13/52	· · Dustproof, splashproof, drip-proof, waterproof, or flameproof cases	Boîtiers protégés contre la poussière, les projections, les éclaboussures, l'eau ou les flammes
H01R 13/523	· · · for use under water **[3]**	pour l' **emploi** sous l'eau **[3]**
H01R 13/527	· · · Flameproof cases **H01R 13/70** takes precedence) **[3]**	Boîtiers protégés contre les flammes (**H01R 13/70** a priorité) **[3]**
H01R 13/53	· · Bases or cases for heavy duty; Bases or cases with means for preventing corona or arcing **[3]**	Socles ou boîtiers pour dures conditions de service; Socles ou boîtiers avec des moyens pour éviter l'effet couronne ou l'amorçage d'un arc **[3]**
H01R 13/533	· · Bases or cases made for use in extreme conditions, e.g. high temperature, radiation, vibration, corrosive environment, pressure (**H01R 13/52** takes precedence) **[3]**	Socles ou boîtiers conçus pour l' **emploi** dans des conditions extrêmes, p.ex. haute température, rayonnements, vibrations, environnement corrosif, pression (**H01R 13/52** a priorité) **[3]**
H01R 13/56	· Means for preventing chafing or fracture of flexible leads at outlet from coupling part	Moyens pour empêcher l'usure ou la fracture des conducteurs flexibles de sortie contre les pièces de couplage
H01R 13/58	· Means for relieving strain on wire connection, e.g. cord grip	Moyens pour atténuer l'effort de tension sur le câble de connexion, p.ex. serre-câble
H01R 13/585	· · Grip increasing with strain force **[3]**	le serrage augmentant avec l'effort de tension **[3]**
H01R 13/59	· · Threaded ferrule or bolt operating in a direction parallel to the cable or	une bague filetée ou un boulon agissant dans une direction parallèle à celle du

		wire **[3]**	câble ou du fil **[3]**
	H01R 13/595	· · Bolts operating in a direction transverse to the cable or wire **[3]**	des boulons agissant dans une direction transversale par rapport à celle du câble ou du fil **[3]**
	H01R 13/60	· Means for supporting coupling part when not engaged	Moyens pour supporter les pièces de couplage non engagées
	H01R 13/62	· Means for facilitating engagement or disengagement of coupling parts or for holding them in engagement **[3]**	Moyens pour faciliter l'engagement ou la séparation des pièces de couplage ou pour les maintenir engagées **[3]**
	H01R 13/621	· · Bolt, set screw or screw clamp **[3,5]**	Boulon, vis de serrage ou attache à vis **[3,5]**
	H01R 13/622	· · Screw-ring or screw-casing (**H01R 13/623** takes precedence) **[5]**	Bague ou boîtier filetés (**H01R 13/623** a priorité) **[5]**
	H01R 13/623	· · Casing or ring with helicoidal groove **[3,5]**	Boîtier ou bague comportant une rainure hélicoïdale **[3,5]**
	H01R 13/625	· · Casing or ring with bayonet engagement **[3,5]**	Boîtier ou bague à couplage à baïonnette **[3,5]**
	H01R 13/627	· · Snap-action fastening **[3]**	Fixation du type à action brusque **[3]**
	H01R 13/629	· · Additional means for facilitating engagement or disengagement of coupling parts, e.g. aligning or guiding means, levers, gas pressure **[3]**	Moyens additionnels pour faciliter l'engagement ou la séparation des pièces de couplage, p.ex. moyens pour aligner ou guider, leviers, pression de gaz **[3]**
	H01R 13/631	· · · for engagement only **[3]**	pour l'engagement uniquement **[3]**
	H01R 13/633	· · · for disengagement only **[3]**	pour la séparation uniquement **[3]**
	H01R 13/635	· · · · by mechanical pressure, e.g. spring force **[3]**	par une pression mécanique, p.ex. par la force d'un ressort **[3]**
	H01R 13/637	· · · · by fluid pressure, e.g. explosion **[3]**	par la pression d'un fluide, p.ex. par explosion **[3]**
	H01R 13/639	· · Additional means for holding or locking coupling parts together after engagement **[3]**	Moyens additionnels pour maintenir ou verrouiller les pièces de couplage entre elles après l'engagement **[3]**
	H01R 13/64	· Means for preventing, inhibiting or avoiding incorrect coupling	Moyens pour empêcher, bloquer ou éviter le couplage incorrect
	H01R 13/641	· · by indicating incorrect coupling; by indicating correct or full engagement **[7]**	par l'indication du couplage incorrect; par l'indication d'un engagement complet ou correct **[7]**
	H01R 13/642	· · by position or shape of contact members **[3]**	par la position ou la forme des pièces de contact **[3]**
	H01R 13/645	· · by exchangeable elements on case or base **[3]**	par des éléments interchangeables sur le boîtier ou sur le socle **[3]**
	H01R 13/646	· Special **adaptation** for high-frequency, e.g. structures providing an impedance match or phase match (**H01R 24/02** takes precedence; shielding arrangements**H01R 13/658**; special **adaptation** for high-frequency by way of structural association with built-in electrical component **H01R 13/719**) **[7]**	**Adaptation** particulière à la haute fréquence, p.ex. structures procurant une **adaptation** d'impédance ou un accord de phase (**H01R 24/02** a priorité; dispositions pour le blindage **H01R 13/658**; **adaptation** particulière à la haute fréquence au moyen d'association structurelle avec des composants électriques incorporés **H01R 13/719**) **[7]**
	H01R 13/648	· Protective earth or shield arrangements on coupling devices **[3]**	Dispositions pour mise à la terre ou pour servir d'écran sur les dispositifs de couplage **[3]**
	H01R 13/652	· · with earth pin, blade or socket **[3]**	avec broche, lame ou alvéole de mise à la terre **[3]**
	H01R 13/655	· · with earth brace **[3]**	avec étrier de mise à la terre **[3]**
	H01R 13/658	· · High frequency shielding arrangements **[3]**	Dispositions pour le blindage en haute fréquence **[3]**
	H01R 13/66	· Structural association with built-in electrical component	Association constructive avec des composants électriques incorporés
	H01R 13/68	· · with built-in fuse	avec fusible incorporé
	H01R 13/70	· · with built-in switch	avec interrupteur incorporé
	H01R 13/703	· · · operated by engagement or	actionné par l'engagement ou le retrait des

		disengagement of coupling parts (**H01R 13/71** takes precedence) **[3]**	pièces de couplage (**H01R 13/71** a priorité) **[3]**
H01R 13/707	· · ·	interlocked with contact members or counterpart **[3]**	verrouillé avec les pièces de contact ou la pièce complémentaire **[3]**
H01R 13/71	· · ·	Contact members of coupling parts operating as switch **[3]**	Eléments de contact des pièces de couplage agissant comme interrupteur **[3]**
H01R 13/713	· · ·	the switch being a safety switch **[3]**	l'interrupteur étant un interrupteur de sécurité **[3]**
H01R 13/717	· ·	with built-in light bulb **[3]**	avec ampoule électrique incorporée **[3]**
H01R 13/719	· ·	specially adapted for high frequency, e.g. with filters **[4]**	spécialement adaptés à la haute fréquence, p.ex. avec des filtres **[4]**
H01R 13/72	·	Means for accommodating flexible lead within the holder	Moyens pour adapter une connexion flexible dans le support
H01R 13/73	·	Means for mounting coupling parts to **apparatus** or structures, e.g. to a wall **[4]**	Moyens de montage des pièces de couplage sur les **appareils** ou structures, p.ex. sur un mur **[4]**
H01R 13/74	· ·	for mounting coupling parts in openings of a panel **[3]**	Montage des pièces de couplage dans les ouvertures d'un panneau **[3]**

EXCERPT FROM DOCUMENT IPC/WG/21/2
EXTRAIT DU DOCUMENT IPC/WG/21/2

REPORT ON THE SEVENTH SESSION OF THE IPC ADVANCED LEVEL SUBCOMMITTEE

17. Since the seventh session of the ALS was the final one, all pending A projects were included in the program of the Working Group. From now on, A projects will designate revision projects originating from the IP5 Offices and C projects will designate revision projects that would be included in the IPC revision program by the Committee. For practical reasons, the schemes adopted by the ALS in the framework of projects A 012, A 013, A 014, A 017, A 018 and A 020 were included in the Technical Annexes of this session (see Technical Annexes 1 to 7 and 9 to this report).

IPC REVISION PROGRAM

General

25. The Working Group noted the decision by the Committee of Experts at its forty-first session that revision projects, including advanced level revision projects, would be considered by the Working Group and forwarded to the Committee for final adoption after completion. It was noted that projects originating from the Trilateral or the IP5 Offices cooperation will be designated by the letter "A" and revision projects included in the IPC revision program by the Committee will be designated by the letter "C" (see paragraph 17, above).

26. Discussions were based on compilations of the relevant revision project files. The Working Group considered nine pending C projects, plus 17 A projects forwarded from the former ALS, and approved amendments relating to those projects (see Technical Annexes 1 to 29 to this report relating to revision projects). The status of those projects and the list of future actions and deadlines are indicated in Annex III to this report.

IPC Revision Projects

27. The Working Group made the following observations with respect to the IPC revision projects. All references to annexes in this paragraph refer to annexes of the corresponding project file, unless otherwise stated.

Project A 021 (electrical) – The latest rapporteur proposal of Annex10 was approved, with some amendments (see Technical Annex 10E to this report).

The Rapporteur was requested to consider whether the approved title of subgroup H01R 13/6589 correctly reflects its intended scope and whether it would be suitable to add an example in the title of subgroup H01R 13/6474, such as "e.g. by dimensional variation".

The Rapporteur was invited to prepare definitions and a RCL, and the International Bureau was requested to provide a CRL.

Comments were also invited on the French version of Annex 11.

RAPPORT SUR LA SEPTIÈME SESSION DU SOUS-COMITÉ CHARGÉ DU NIVEAU ÉLEVÉ DE LA CIB

17. Étant donné que la septième session de l'ALS était la dernière, tous les projets A en instance ont été inscrits au programme du groupe du travail. Dorénavant, les projets A désigneront les projets de révision émanant des offices de l'IP5 et les projets C désigneront les projets de révision qui seront inscrits au programme de révision de la CIB par le comité. Pour des raisons pratiques, les schémas adoptés par l'ALS dans le cadre des projets A 012, A 013,

A 014, A 017, A 018 et A 020 ont été inclus dans les annexes techniques du rapport sur la session en cours (voir les annexes techniques 1 à 7 et 9 du présent rapport).

PROGRAMME DE RÉVISION DE LA CIB

Généralités

25. Le groupe de travail a pris note de la décision prise par le comité d'experts à sa quarante et unième session selon laquelle les projets de révision, y compris ceux relatifs au niveau élevé, seront examinés par le groupe de travail et transmis au comité pour adoption définitive une fois achevés. Il a été pris note du fait que les projets émanant des offices de la coopération trilatérale ou de l'IP5 seraient désignés par la lettre "A" et que les projets de révision inscrits au programme de révision de la CIB par le comité seraient désignés par la lettre "C" (voir le paragraphe 17).

26. Les délibérations ont eu lieu sur la base de synthèses des dossiers de projet correspondants. Le groupe de travail a examiné neuf projets C en instance ainsi que 17 projets A transmis par l'ancien ALS et a approuvé les modifications relatives à ces projets (voir les annexes techniques 1 à 29 du présent rapport relatives aux projets de révision). L'état d'avancement de ces projets et la liste des mesures à prendre et des délais correspondants font l'objet de l'annexe III du présent rapport.

Projets de révision de la CIB

27. Le groupe de travail a formulé les observations ci-après concernant les projets de révision de la CIB. Dans le présent paragraphe, tout renvoi à des annexes désigne, sauf indication contraire, les annexes du dossier de projet correspondant.

Projet A 021 (électricité) – La dernière proposition du rapporteur figurant à l'annexe 10 a été approuvée sous réserve de certaines modifications (voir l'annexe technique 10E du présent rapport).

Le rapporteur a été prié de déterminer si le titre approuvé du sous-groupe H01R 13/6589 rendait correctement compte de sa portée envisagée et s'il y avait lieu d'ajouter un exemple dans le titre du sous-groupe H01R 13/6474, tel que "e.g. by dimensional variation".

Le rapporteur a été invité à établir des définitions et une table de concordance et le Bureau international a été prié d'établir une table des renvois croisés.

Des observations ont également été demandées sur la version française figurant à l'annexe 11.

ANNEX 10E H01R [Project-Rapporteur : A021/US <WG21>]

AL C *13/646* · *specially adapted for high-frequency, e.g. structures providing an impedance match or phase match (**H01R 13/648** takes precedence; coaxial-type shielded connectors **H01R 24/38**)*

AL N *13/6461* · · *Means for preventing cross-talk*

AL N *13/6463* · · · *using twisted pairs of wires*

AL N *13/6464* · · · *by adding capacitive elements*

AL N *13/6466* · · · · *on substrates, e.g. PCBs [Printed Circuit Boards]*

AL N *13/6467* · · · *by cross-over of signal conductors*

AL N *13/6469* · · · · *on substrates*

AL N *13/6471* · · · *by special arrangement of ground and signal conductors, e.g. GSGS [Ground-Signal-Ground-Signal]*

AL N *13/6473* · · *Impedance matching*

AL N *13/6474* · · · *by variation of conductive elements*

AL N *13/6476* · · · · *by making an aperture, e.g. a hole*

AL N *13/6477* · · · *by variation of dielectric properties*

AL N *13/6479* · · · · *by making an aperture, e.g. a hole*

AL C *13/648* · *Protective earth or shield arrangements on coupling devices (coaxial connectors **H01R 24/38**)*

CL C *13/658* · · *High frequency shielding arrangements, e.g. against EMI [Electro-Magnetic Interference] or EMP [Electro-Magnetic Pulse]*

AL N *13/6581* · · · *Shield structure*

AL N *13/6582* · · · · *with resilient means for engaging mating connector*

AL N *13/6583* · · · · · *with separate conductive resilient members between mating shield members*

AL N *13/6584* · · · · · · *formed by conductive elastomeric members, e.g. flat gaskets or O-rings*

AL N *13/6585* · · · · *Shielding material individually surrounding or interposed between mutually spaced contacts*

AL N *13/6586* · · · · · *for separating multiple connector modules*

AL N *13/6587* · · · · · · *for mounting on PCBs*

AL N *13/6588* · · · · · *with through openings for individual contacts*

AL N *13/6589* · · · · · *with wires separated by conductive housing parts*

AL N *13/659* · · · · *with plural ports for distinct connectors*

AL N *13/6591* · · · *Specific features or arrangements of connection of shield to conductive members*

AL N *13/6592* · · · · *the conductive member being a shielded cable*

AL N *13/6593* · · · · · *the shield being composed of different pieces*

AL N *13/6594* · · · · *the shield being mounted on a PCB and connected to conductive members*

AL N *13/6595* · · · · · *with separate members fixing the shield to the PCB*

AL N *13/6596* · · · · *the conductive member being a metal grounding panel*

AL N *13/6597* · · · · *the conductive member being a contact of the connector*

AL N *13/6598* · · · *Shield material*

AL N *13/6599* · · · · *Dielectric material made conductive, e.g. plastic material coated with metal*

CL C *13/68* · · *with built-in fuse*

AL N *13/684* · · · *the fuse being removable*

AL N *13/688* · · · · *with housing part adapted for accessing the fuse*

AL N *13/692* · · · · · *Turnable housing part*

AL N *13/696* · · · *the fuse being integral with the terminal, e.g. pin or socket*

CL C *13/719* · · *specially adapted for high frequency, e.g. with filters*

AL N *13/7193* · · · *with ferrite filters*

AL N *13/7195* · · · *with planar filters with openings for contacts*

AL N *13/7197* · · · *with filters integral with or fitted onto contacts, e.g. tubular filters*

WORLD INTELLECTUAL PROPERTY ORGANIZATION	
IPC REVISION WORKING GROUP	
Project: **A 021:** H01R 13/00 List of cross references	Date: June, 2009

References affected by revision project A021 (H01R 13/00)

Del. or C-mod. existing group	**Ref to this group**	**Proposed amendment**	**Comment**
H01R 13/646	None		
H01R 13/648	None		
H01R 13/658	H01R 13/646	Done at WG/21 (see TAs)	
H01R 13/68	None		
H01R 13/719	H01R 13/646	Done at WG/21 (see TAs)	

United States Patent and Trademark Office	
Rapporteur Report	
Topic: A021, H01R 13/00	**Date: September 24, 2009**

Ref: A021-Annex 12, IB Working Group Decision, 03-Aug-09
A021-Annex 13, IB List of Cross References, 30-Aug-09
WG219-Annex 7, IB Technical Annexes (Technical Annex-10E), 30-Jun-09

Background:
Referring to A021-Annex 12:

- The latest rapporteur proposal of A021-Annex10 was approved at the 21st IPC RWG, with some amendments presented in WG219-Annex 7, Technical Annex 10E.
- Rapporteur was requested to consider whether the approved title of subgroup H01R 13/6589 correctly reflects its intended scope.
- Rapporteur was requested to consider whether it would be suitable to add an example in the title of subgroup H01R 13/6474, such as "e.g. by dimensional variation".
- Rapporteur was invited to prepare definitions and a RCL

International Bureau provided the List of Cross References in A021-Annex 13 as requested.

Actions:

Rapporteur provides an updated proposed A021 scheme based on the scheme approved at the 21st IPC RWG with all the amendments presented as followed:

1/ Modify the references in H01R 13/646:
From

H01R 13/646 . specially adapted for high-frequency, e.g. structures providing an impedance match or phase match **(H01R 24/36 takes precedence; coaxial connectors H01R 24/38)**

To

H01R 13/646 . specially adapted for high-frequency, e.g. structures providing an impedance match or phase match (Non-coaxed protective earth or shield arrangements H01R 13/648 -13/6599; Coaxed connectors specifically adapted for high frequency H01R 24/40-24/56)

2/ Modify the title of H01R13/6474:
From

H01R 13/6474 . . . by variation of conductive elements

To

H01R 13/6474 . . . by variation of conductive properties, e.g. by dimension variations

3/ Combine H01R 13/6477 and H01R 13/6479, i.e. delete H01R 13/6479 since there are not many documents for " Variation of dielectric properties " .

4/ The R has investigated H01R 13/6589 and believes that the title does reflect the scope of the group as proposed.

H01R 13/6589 . . . . . Wires separated with conductive housing part

Examples: US 6358092; US 5899770; US 4405187; US 6135817

Definition: Subject matter under group H01R 13/6585 wherein the shield includes a conductive wall portion that separates enclosed wires.

5/ Add subgroup H01R 13/66 with modified title including new reference:

CL	M	13/66	·	Structural association with built-in electrical component (Coupling devices having concentrically or coaxially-arranged contacts H01R 24/38-24/56)

6/ Add subgroup H01R 13/717 with modified title:

AL	M	13/717	· ·	with built-in light source

Please find the complete updated proposed A021 scheme, R proposed definitions and RCL in the next annexes. Under the definition statements, US documents are listed as examples for subject matter reference. The R intends to remove these examples once the definitions have been approved by the RWG.

[end]

United States Patent and Trademark Office	
Topic: A021, H01R 13/00	**Date: 24 September 2009**

Ref: A021-Annex 14, RReport, 24-Sep-09
WG219-Annex 7, Technical Annex -10E, 30-Jun-09

A021 updated scheme according to WG219-Annex 7 (Technical Annex-10E) and modifications presented in RR, A021-Annex 14.

		H01R		**Titles**
AL	C	13/646	·	Specially adapted for high-frequency, e.g. structures providing an impedance match or phase match (Non-coaxed protective earth or shield arrangements H01R 13/648 -13/6599; Coaxed connectors specifically adapted for high frequency H01R 24/40-24/56)
AL	N	13/6461	· ·	Means for preventing cross-talk
AL	N	13/6463	· · ·	using twisted pairs of wires
AL	N	13/6464	· · ·	by adding capacitive elements
AL	N	13/6466	· · · ·	on substrates, e.g. Printed Circuit Boards [PCBs]
AL	N	13/6467	· · ·	by cross-over of signal conductors
AL	N	13/6469	· · · ·	on substrates
AL	N	13/6471	· · ·	by special arrangement of ground and signal conductors, e.g. Ground-Signal-Ground-Signal [GSGS]
AL	N	13/6473	· ·	Impedance matching
AL	N	13/6474	· · ·	by variation of conductive properties, e.g. by dimension variations
AL	N	13/6476	· · · ·	by making an aperture, e.g. a hole
AL	N	13/6477	· · ·	by variation of dielectric properties
~~AL~~	~~N~~	~~13/6479~~	~~· · · ·~~	~~by making an aperture, e.g. a hole~~
AL	C	13/648	·	Protective earth or shield arrangements on coupling devices (Coaxially arranged shields H01R 24/38)
CL	C	13/658	· ·	High frequency shielding arrangements, e.g. against EMI [Electro-Magnetic Interference] or EMP [Electro-Magnetic Pulse]
AL	N	13/6581	· · ·	Shield structure
AL	N	13/6582	· · · ·	with resilient means for engaging mating connector
AL	N	13/6583	· · · · ·	with separate conductive resilient members between mating shield members
AL	N	13/6584	· · · · · ·	formed by conductive elastomeric members, e.g. flat gaskets or O-rings
AL	N	13/6585	· · · ·	Shielding material individually surrounding or interposed between mutually spaced contacts
AL	N	13/6586	· · · · ·	for separating multiple connector modules

AL	N	13/6587	· · · · · ·	for mounting on PCBs
AL	N	13/6588	· · · · ·	Shield with through openings for individual contacts
AL	N	13/6589	· · · · ·	Wires separated with conductive housing part
AL	N	13/659	· · · ·	with plural ports for distinct connectors
AL	N	13/6591	· · ·	Specific features or arrangements of connection of shield to conductive members
AL	N	13/6592	· · · ·	the conductive member being a shielded cable
AL	N	13/6593	· · · · ·	Shield being composed of different pieces
AL	N	13/6594	· · · ·	the shield being mounted on a PCB and connected to conductive members
AL	N	13/6595	· · · · ·	with separate members fixing the shield to the PCB
AL	N	13/6596	· · · ·	the conductive member being a metal grounding panel
AL	N	13/6597	· · · ·	the conductive member being a contact of the connector
AL	N	13/6598	· · ·	Shield material
AL	N	13/6599	· · · ·	Dielectric material made conductive, e.g. plastic material coated with metal
CL	M	13/66	·	Structural association with built-in electrical component (Coupling devices having concentrically or coaxially-arranged contacts H01R 24/38-24/56)
CL	C	13/68	· ·	with built-in fuse
AL	N	13/684	· · ·	the fuse being removable
AL	N	13/688	· · · ·	with housing part adapted for accessing the fuse
AL	N	13/692	· · · · ·	Turnable housing part
AL	N	13/696	· · ·	the fuse being integral with the terminal, e.g. pin or socket
AL	M	13/717	· ·	with built-in light source
CL	C	13/719	· ·	specially adapted for high frequency, e.g. with filters
AL	N	13/7193	· · ·	with ferrite filters
AL	N	13/7195	· · ·	with planar filters with opening for contacts
AL	N	13/7197	· · ·	with filters integral with or fitted onto contact, e.g. tubular filters

[End]

IPC-AL Definition	**Project: A021**
United States Patent and Trademark Office	**Class/subclass: H01R 13/00**
Rapporteur Proposal	**Date: 24-September-09**

Title – H01R 13/646

Specially adapted for high-frequency, e.g. structures providing an impedance match or phase match

Note: Exclude shielding and coaxial type shielded connectors.

Definition statement

This group covers:

Subject matter under group H01R 13/00 comprising details of coupling devices particularly adapted to handle high-frequency currents or voltages.

References relevant to classification in this group

This group does not cover:

Non-coaxed protective earth or shield arrangements	H01R 13/648-13/6599
Coaxed connectors specifically adapted for high frequency	H01R 24/40-24/56

Title – H01R 13/6461

Means for preventing cross-talk

Definition statement

This group covers:

Subject matter under group H01R 13/646 comprising devices or arrangements for preventing interference in one conductor of a coupling device caused by stray electromagnetic or electrostatic energy from another conductor.

Title – H01R 13/6463

Using twisted pairs of wires

Definition statement

This group covers:

Subject matter under group H01R 13/6461 comprising arrangements in which cross-talk between two pairs of conductors is reduced by the addition of at least one pair of twisted wires, each wire of which is connected to one conductor of each of the pairs of conductors.

(Example: US 5899770)

Title – H01R 13/6464

by adding capacitive elements

Definition statement

This group covers:

Subject matter under group H01R 13/6461 comprising arrangements in which cross-talk between two pairs of conductors is reduced by the addition of a capacitive coupling element between at least one conductor of each pair.

(Examples: US 5439384; US 5152699; 5213522; US 5647768)

Title – H01R 13/6466

on substrates, e.g. Printed Circuit Boards [PCBs]

Definition statement

This group covers:

Subject matter under H01R 13/6464 in which the capacitive coupling element is formed on a substrate or a circuit board.

Title – H01R 13/6467

by cross-over of signal conductors

Definition statement

This group covers:

Subject matter under group H01R 13/6461 in which cross-talk between pairs of conductors is reduced by crossing one conductor of each pair over the other conductor.

Title - H01R 13/6469

on substrates

Definition statement

This group covers:

Subject matter under group H01R 13/6467 in which at least part of a conductor is mounted on a planar support.

Title - H01R 13/6471

by special arrangement of ground and signal conductors e.g. Ground-Signal-Ground-Signal [GSGS]

Definition statement

This group covers:

Subject matter under group H01R 13/6461 comprising structural relationships of signal-carrying and ground conductors in a coupling device specifically for reducing cross-talk.

Title - H01R 13/6473

Impedance matching

Definition statement

This group covers:

Subject matter under group H01R 13/646 comprising coupling devices whose impedance is tuned to the impedance of the circuit to which it is connected.

Title - H01R 13/6474

by variation of conductive properties, e.g. by dimension variations

Definition statement

This group covers:

Subject matter under group H01R 13/6473 wherein the impedance of the coupling is tuned by varying the properties of a conductive element within the device, e.g. by varying the shape or material of the conductive element.

Title - H01R 13/6476

by making an aperture, e.g. hole

Definition statement

This group covers:

Subject matter under group H01R 13/6474 wherein the shape of the conductive element includes a hole.

Title – H01R 13/6477

by variation of dielectric properties

Definition statement

This group covers:

Subject matter under group H01R 13/6473 wherein the impedance of the coupling is tuned by varying the properties of a dielectric component within the device, e.g. by varying the shape or material of the dielectric component.

Title - H01R 13/648

Protective earth or shield arrangements on coupling devices

References relevant to classification in this group

This group does not cover:

Coaxially arranged shields	H01R 24/38

Title - H01R 13/658

High frequency shielding arrangements, e.g. against Electro-Magnetic Interference [EMI] or Electro-Magnetic Pulse [EMP]

Definition statement

This group covers:

Subject matter under group H01R 13/648 comprising a conductive means for preventing or reducing (a) detrimental effects induced within a connector or contact due to capacitive or inductive coupling with electric or magnetic fields generated from a source outside of the connector or contact, (b) induced electrical interference or signal loss due to capacitive or inductive coupling between mutually insulated contacts within a plural-contact connector, (i.e. reducing cross-talk), or (c) undesirable loss of electrical information or signal due to electrical radiation of signal from connector or contact.

Title - H01R 13/6581

Shield structure

Definition statement

This group covers:

Subject matter under group H01R 13/658 comprising details of the shape or construction of a shield.

Title - H01R 13/6582

with resilient means for engaging mating connector

Definition statement

This group covers:

Subject matter under group H01R 13/6581 comprising shielding arrangements including a resilient means on one connector for engaging a mating connector.

Title - H01R 13/6583

with separate conductive resilient members between mating shield members

Definition statement

This group covers:

Subject matter under group H01R 13/6582 including additional resilient means for electrically connecting the shields of two mating connectors.

(Examples: US 4808126; US 4544227; US 4655533)

Title - H01R 13/6584

formed by conductive elastomeric members, e.g. flat gaskets or O-rings

Definition statement

This group covers:

Subject matter under group H01R 13/6583 wherein the separate resilient means comprises a conductive material having elastic properties.

(Examples: US 5317105; US 4401355)

Title - H01R 13/6585

Shielding material individually surrounding or interposed between mutually spaced contacts

Definition statement

This group covers:

Subject matter under group H01R 13/6581 comprising conductive material either (a) formed around but spaced apart from at least a portion of at least one contact, so that the contact is inductively shielded from one or more other contacts, or (b) interposed between two or more contacts, so that the contacts are inductively shielded from one another.

(Examples: US 6527587; US 6923664; US 6939173)

Title - H01R 13/6586

for separating multiple connector modules

Definition statement

This group covers:

Subject matter under group H01R 13/6585 wherein the shielding material separates two or more assemblies of plural contacts.

Title - H01R 13/6587

for mounting on PCBs

Definition statement

This group covers:

Subject matter under group H01R 13/6586 wherein the shield has means to facilitate mounting on a printed circuit board.

Title - H01R 13/6588

Shield with through openings for individual contacts

Definition statement

This group covers:

Subject matter under group H01R 13/6585 wherein the shield has apertures corresponding to individual contacts.

(Example: US 4070084)

Title - H01R 13/6589

Wires separated with conductive housing part

Definition statement

This group covers:

Subject matter under group H01R 13/6585 wherein the shield includes a conductive wall portion that separates enclosed wires.

(Examples: US 4405187; US 6135817)

Title - H01R 13/659

with plural ports for distinct connectors

Definition statement

This group covers:

Subject matter under group H01R 13/6581 wherein the shield encloses two or more connectors.

(Examples: US 6908346; US 6575761; US 6733332; US 6722924)

Title - H01R 13/6591

Specific features or arrangements of connection of shield to conductive members

Definition statement

This group covers:

Subject matter under group H01R 13/658 including specific features of a connection between the conductive shield and a conductive member of the connector or another component.

Title - H01R 13/6592

the conductive member being a shielded cable

Definition statement

This group covers:

Subject matter under group H01R 13/6591 wherein the connection is to an external conductive sheath of an electric cable.

Title - H01R 13/6593

Shield being composed of different pieces

Definition statement

This group covers:

Subject matter under group H01R 13/6592 wherein the shield is comprised of assembled parts.

Title - H01R 13/6594

the shield being mounted on a PCB and connected to conductive members

Definition statement

This group covers:

Subject matter under group H01R 13/6591 wherein the shield is mounted on a printed circuit board and is electrically connected to a conductor on the circuit board.

Title - H01R 13/6595

with separate members fixing the shield to the PCB

Definition statement

This group covers:

Subject matter under group H01R 13/6594 wherein the shield is attached to the printed circuit board by a separate element or member.

(Examples: US4824398; US4337989; US4889502)

Title - H01R 13/6596

the conductive member being a metal grounding panel

Definition statement

This group covers:

Subject matter under group H01R 13/6591 including specific features of a connection between the conductive shield and an electrically grounded metal panel.

(Examples: US 5064388; US 3366918; US 5647765)

Title - H01R 13/6597

the conductive member being a contact of the connector

Definition statement

This group covers:

Subject matter under group H01R 13/6591 including specific features of a connection between the conductive shield and a contact of the connector.

(Examples: US 2797397; US 6540556)

Title - H01R 13/6598

Shield material

Definition statement

This group covers:

Subject matter under group H01R 13/658 comprising the composition or properties of the shielding material.

Title - H01R 13/6599

Dielectric material made conductive, e.g. plastic material coated with metal

Definition statement

This group covers:

Subject matter under group H01R 13/6598 comprising a dielectric material having conductive additives or coatings.

(Example: US 5509823)

Title - H01R 13/66

Structural association with built-in electrical component

Definition statement

This group covers:

Subject matter under group H01R 13/00 comprising details of the structural relationship of a coupling device other than a non-coaxial connector and an electrical component housed within the device.

References relevant to classification in this group

This group does not cover:

Coupling devices having concentrically or coaxially-arranged contacts	H01R 24/38- 24/56

Title - H01R 13/68

with built-in fuse

Definition statement

This group covers:

Subject matter under group H01R 13/66 wherein the built-in electrical component is a fusible circuit breaker.

Title - H01R 13/684

the fuse being removable

Definition statement

This group covers:

Subject matter under group H01R 13/68 wherein the built-in fuse is removable from the coupling device.

Title - H01R 13/688

with housing part adapted for accessing the fuse

Definition statement

This group covers:

Subject matter under group H01R 13/684 wherein the coupling device includes an opening or a removable or repositionable portion which permits access to the built-in removable fuse.

Title - H01R 13/692

Turnable housing part

Definition statement

This group covers:

Subject matter under group H01R 13/688 wherein the housing part is rotatable, e.g. threadably connected or hinged, to permit access to the built-in removable fuse.

Title - H01R 13/696

the fuse being integral with the terminal, e.g. pin or socket

Definition statement

This group covers:

Subject matter under group H01R 13/68 wherein the built-in fuse is irremovably attached to a contact of the coupling device.

Title - H01R 13/717

with built-in light source

Definition statement

This group covers:

Subject matter under group H01R 13/66 wherein in the built-in electrical component is an electric light source.

Title - H01R 13/719

specially adapted for high frequency, e.g. with filters

Definition statement

This group covers:

Subject matter under group H01R 13/66 comprising coupling devices having built-in electrical components or other features which adapt for use with high frequency alternating currents or voltages.

Glossary of Terms

Hereafter, in this group, the term “ filter” is used in the sense of a “noise-reducing member”.

Title - H01R 13/7193

with ferrite filters

Definition statement

This group covers:

Subject matter under group H01R 13/719 wherein the built-in electrical component is a ferrite filter.

Title - H01R 13/7195

with planar filters with opening for contacts

Definition statement

This group covers:

Subject matter under group H01R 13/719 wherein the built-in electrical component consists of a flat, i.e. essentially two-dimensional, filter circuit device, e.g. a PCB with a filter fixed thereon, with apertures to permit engagement of mating contacts.

(Examples: US 4729752; US 6183300)

Title - H01R 13/7197

with filters integral with or fitted onto contact, e.g. tubular filters

Definition statement

This group covers:

Subject matter under group H01R 13/719 wherein the built-in electrical component consists of a filter integral with, or fitted onto, at least one connector contact.

(Example: US 6431916)

UNITED STATES PATENT AND TRADEMARK OFFICE	
Topic: A021, H01R 13/00 RCL - Revision Concordance List	Date: September 24, 2009

OLD	**NEW**	Comments
H01R 13/646	H01R 13/646-H01R 13/6477	
H01R 13/658	H01R 13/658-H01R 13/6599	
H01R 13/68	H01R 13/68-H01R 13/696	
H01R 13/719	H01R 13/719-H01R 13/7197	

Principal Directorate Patent Grant Automation - Directorate Classification		
Project: **A021**	Details of electric connectors	IPC range: **H01R 13**
Comment French Version		14 July 2009

Ref: A021-Annex 11, IB French version, 11-June-09

With regard to the French Version as proposed by the IB in Annex 11, EP notes that they basically support its contents, but would like to propose the following three corrections:

EN: AL , N	*13/6471*	*. . . by special arrangement of ground and signal conductors, e.g. GSGS [Ground-Signal-Ground-Signal]*		*par agencement particulier des conducteurs de mise à la terre et de signaux, p.ex. GSGS [mise à la terre - signal - mise à la terre - signal]*

EN: AL , N	*13/6582*	*. . . . with resilient means for engaging mating connector*		*avec des moyens élastiques destinés à venir en contact avec le connecteur coresspondant*

EN: AL , N	*13/6583*	*. . . . . with separate conductive resilient member between mating shield members*		*avec un organe élastique conducteur indépendant entre les organes de blindage correspondants*

Ruben de Bekker

ANNEXE 1E,F H01R [Projet-Rapporteur : A021/US] <WG21>

Commentaires FR sur la proposition de version française du BI
H01R-13/6589, 13/688 et 13/692 remplacement de l'expression « partie boîtier » par « partie de logement ».
Nous approuvons les observations EP.

EN: 13/646 AL , C	· *Special adaptation for high-frequency, e.g. structures providing an impedance match or phase match*	*Adaptation particulière à la haute fréquence, p.ex. structures procurant une adaptation d'impédance ou un accord de phase*
EN: 13/6461 AL , N	· · *Means for preventing cross talk*	*Moyens pour empêcher la diaphonie*
EN: 13/6463 AL , N	· · · *using twisted pair of wires*	*utilisant une paire torsadée de fils*
EN: 13/6464 AL , N	· · · *by adding capacitive element*	*en ajoutant un élément capacitif*
EN: 13/6466 AL , N	· · · · *on substrate, e.g. PCB [Printed Circuit Board]*	*sur un substrat, p.ex. une carte de circuits imprimés*
EN: 13/6467 AL , N	· · · *by cross-over of signal conductors*	*par croisement de conducteurs de signaux*
EN: 13/6469 AL , N	· · · · *on substrate*	*sur un substrat*
EN: 13/6471 AL , N	· · · *by special arrangement of ground and signal conductors, e.g. GSGS [Ground-Signal-Ground-Signal]*	*par agencement particulier des conducteurs de mise à la terre et de signaux, p.ex. GSGS [signal de mise à la terre -- signal de mise à la terre]*
EN: 13/6473 AL , N	· · *Impedance matching*	*Adaptation d'impédance*
EN: 13/6474 AL , N	· · · *by variation of conductive element*	*par variation de l'élément conducteur*
EN: 13/6476 AL , N	· · · · *by making an aperture, e.g. hole*	*en pratiquant une ouverture, p.ex. un trou*
EN: 13/6477 AL , N	· · · *by variation of dielectric property*	*par variation des propriétés diélectriques*
EN: 13/6479 AL , N	· · · · *by making an aperture, e.g. hole*	*en pratiquant une ouverture, p.ex. un trou*
EN: 13/658	· · High frequency shielding arrangements,	Dispositions pour le blindage en haute fréquence,

CL , M	e.g. EMI [Electro-Magnetic Interference] or EMP [Electro-Magnetic Pulse] proof	p.ex. protection contre les parasites électromagnétiques ou les impulsions électromagnétiques
EN: 13/6581 AL , N	· · · *Structure of shield*	*Structure du blindage*
EN: 13/6582 AL , N	· · · · *with resilient means for engaging mating connector*	*avec des moyens élastiques destinés à venir en contact avec le connecteur homologue*
EN: 13/6583 AL , N	· · · · · *with separate conductive resilient member between mating shield members*	*avec un organe élastique conducteur indépendant entre les organes de blindage homologues*
EN: 13/6584 AL , N	· · · · · · *formed by conductive elastomeric member, i.e. flat gasket or O-ring*	*formé par un organe élastomère conducteur, p.ex. un joint plat ou un joint torique*
EN: 13/6585 AL , N	· · · · *Shielding material individually surrounding or interposed between mutually spaced contacts*	*Matériau de blindage entourant individuellement des contacts espacés les uns des autres ou interposé entre ces derniers*
EN: 13/6586 AL , N	· · · · · *for separating multiple connector modules*	*pour séparer des modules de connecteurs multibroches*
EN: 13/6587 AL , N	· · · · · · *for mounting on PCB*	*pour montage sur une carte de circuits imprimés*
EN: 13/6588 AL , N	· · · · · *Shield with through openings for individual contacts*	*Blindage à ouvertures débouchantes pour contacts individuels*
EN: 13/6589 AL , N	· · · · · *with conductive housing part separating wires*	*avec partie de logement conductrice séparant les fils*
EN: 13/659 AL , N	· · · · *Shield with plural ports for distinct connectors*	*Blindage muni de plusieurs orifices pour connecteurs distincts*
EN: 13/6591 AL , N	· · · *Specific features or arrangements of connection of shield to conductive member*	*Caractéristiques ou dispositions spécifiques de raccordement du blindage à l'organe conducteur*
EN: 13/6592 AL , N	· · · · *to shielded cable*	*à un câble blindé*
EN: 13/6593 AL , N	· · · · · *Shield composed of different pieces*	*Blindage composé de différentes pièces*
EN: 13/6594 AL , N	· · · · *Shield mounted on printed circuit board and connected to conductive member*	*Blindage monté sur une carte de circuits imprimés et raccordé à l'organe conducteur*
EN: 13/6595 AL , N	· · · · · *with separate member fixing shield to PCB*	*avec élément séparé fixant le blindage à la carte de circuits imprimés*

EN: 13/6596 AL , N	· · · · *to metal grounding panel*	*à un panneau métallique de mise à la terre*
EN: 13/6597 AL , N	· · · · *to contact of the connector*	*à un contact du connecteur*
EN: 13/6598 AL , N	· · · *Material of shield*	*Matériau du blindage*
EN: 13/6599 AL , N	· · · · *Conductive or dielectric material*	*Matériau conducteur ou diélectrique*
EN: 13/684 AL , N	· · · *Removable fuse*	*Fusible amovible*
EN: 13/688 AL , N	· · · · *with housing part adapted for accessing the fuse*	*avec partie de logement adaptée pour accéder au fusible*
EN: 13/692 AL , N	· · · · · *Turnable housing part*	*Partie de logement susceptible de rotation*
EN: 13/696 AL , N	· · · *Integral with the terminal, e.g. pin or socket*	*Solidaire de la borne, p.ex. broche ou douille*
EN: 13/717 AL , M	· · with built-in light source	*avec source lumineuse intégrée*
EN: 13/7193 AL , N	· · · *Ferrite filter*	*Filtre en ferrite*
EN: 13/7195 AL , N	· · · *Planar filter with opening for contacts*	*Filtre plan avec ouverture pour les contacts*
EN: 13/7197 AL , N	· · · *Filter integral with or fitted onto contact, e.g. tubular filter*	*Filtre solidaire du contact ou monté sur ce dernier, p.ex. filtre tubulaire*

Principal Directorate Patent Grant Automation - Directorate Classification		
Project: **A021**	Details of electric connectors	IPC range: **H01R 13**
Comment French Version		12 Nov 2009

Ref: A021-Annex 11, IB French Version, 11-June-09
A021-Annex 18, EP comment, 07-Oct-09
A021-Annex 19, FR comment, 04-Nov-09

In Annex 18, EP commented to the French Version as proposed by the IB in Annex 11.
FR, in Annex 19, basically supports the comments of EP, but further proposes to translate the word "housing" in the H01R 13/6589, 13/688 and 13/692 with the word "logement" .
EP specialists do not concur with the view of FR and are of the position that the translation should remain "boîtier". The reason for this is that in the present (connector) context a "logement" is more a "seating" and as such it is only a specific part of a "housing".

Ruben de Bekker

United States Patent and Trademark Office	
Topic: A021, H01R 13/00	**Date: 24 November 2009**

Ref:

A021-Annex 12, Working Group Decision, 03-Aug-09
A021-Annex 14, RReport, 24-Sep-09

Attached is the updated A021 scheme according to the provisional approved scheme in A021-Annex 12 with modifications presented in RR, A021-Annex 14.

		H01R		**Titles**
AL	C	13/646	·	Specially adapted for high-frequency, e.g. structures providing an impedance match or phase match (Non-coaxed protective earth or shield arrangements H01R 13/648 -13/6599; Coaxed connectors specifically adapted for high frequency H01R 24/40-24/56)
AL	N	13/6461	· ·	Means for preventing cross-talk
AL	N	13/6463	· · ·	using twisted pairs of wires
AL	N	13/6464	· · ·	by adding capacitive elements
AL	N	13/6466	· · · ·	on substrates, e.g. PCBs [Printed Circuit Boards]
AL	N	13/6467	· · ·	by cross-over of signal conductors
AL	N	13/6469	· · · ·	on substrates
AL	N	13/6471	· · ·	by special arrangement of ground and signal conductors, e.g. GSGS [Ground-Signal-Ground-Signal]
AL	N	13/6473	· ·	Impedance matching
AL	N	13/6474	· · ·	by variation of conductive properties, e.g. by dimension variations
AL	N	13/6476	· · · ·	by making an aperture, e.g. a hole
AL	N	13/6477	· · ·	by variation of dielectric properties
~~AL~~	~~N~~	~~13/6479~~	~~· · · · ·~~	~~by making an aperture, e.g. a hole~~
AL	C	13/648	·	Protective earth or shield arrangements on coupling devices (Coaxially arranged shields H01R 24/38)
CL	C	13/658	· ·	High frequency shielding arrangements, e.g. against EMI [Electro-Magnetic Interference] or EMP [Electro-Magnetic Pulse]
AL	N	13/6581	· · ·	Shield structure
AL	N	13/6582	· · · ·	with resilient means for engaging mating connector
AL	N	13/6583	· · · · ·	with separate conductive resilient members between mating shield members
AL	N	13/6584	· · · · · ·	formed by conductive elastomeric members, e.g. flat gaskets or O-rings
AL	N	13/6585	· · · ·	Shielding material individually surrounding or interposed between mutually spaced contacts
AL	N	13/6586	· · · · ·	for separating multiple connector modules

AL	N	13/6587	· · · · · ·	for mounting on PCBs
AL	N	13/6588	· · · · ·	with through openings for individual contacts
AL	N	13/6589	· · · · ·	with wires separated by conductive housing parts
AL	N	13/659	· · · ·	with plural ports for distinct connectors
AL	N	13/6591	· · ·	Specific features or arrangements of connection of shield to conductive members
AL	N	13/6592	· · · ·	the conductive member being a shielded cable
AL	N	13/6593	· · · · ·	the shield being composed of different pieces
AL	N	13/6594	· · · ·	the shield being mounted on a PCB and connected to conductive members
AL	N	13/6595	· · · · ·	with separate members fixing the shield to the PCB
AL	N	13/6596	· · · ·	the conductive member being a metal grounding panel
AL	N	13/6597	· · · ·	the conductive member being a contact of the connector
AL	N	13/6598	· · ·	Shield material
AL	N	13/6599	· · · ·	Dielectric material made conductive, e.g. plastic material coated with metal
CL	M	13/66	·	Structural association with built-in electrical component (Coupling devices having concentrically or coaxially-arranged contacts H01R 24/38-24/56)
CL	C	13/68	· ·	with built-in fuse
AL	N	13/684	· · ·	the fuse being removable
AL	N	13/688	· · · ·	with housing part adapted for accessing the fuse
AL	N	13/692	· · · · ·	Turnable housing part
AL	N	13/696	· · ·	the fuse being integral with the terminal, e.g. pin or socket
AL	M	13/717	· ·	with built-in light source
CL	C	13/719	· ·	specially adapted for high frequency, e.g. with filters
AL	N	13/7193	· · ·	with ferrite filters
AL	N	13/7195	· · ·	with planar filters with openings for contacts
AL	N	13/7197	· · ·	with filters integral with or fitted onto contacts, e.g. tubular filters

[End]

IPC-AL Definition	**Project: A021**
United States Patent and Trademark Office	**Class/subclass: H01R 13/00**
Rapporteur Proposal	**Date: 24-November-09**

Title – H01R 13/646

Specially adapted for high-frequency, e.g. structures providing an impedance match or phase match

Note: Exclude shielding and coaxial type shielded connectors.

Definition statement

This group covers:

Subject matter under group H01R 13/00 comprising details of coupling devices particularly adapted to handle high-frequency currents or voltages.

References relevant to classification in this group

This group does not cover:

Non-coaxed protective earth or shield arrangements	H01R 13/648-13/6599
Coaxed connectors specifically adapted for high frequency	H01R 24/40-24/56

Title – H01R 13/6461

Means for preventing cross-talk

Definition statement

This group covers:

Subject matter under group H01R 13/646 comprising devices or arrangements for preventing interference in one conductor of a coupling device caused by stray electromagnetic or electrostatic energy from another conductor.

Title – H01R 13/6463

Using twisted pairs of wires

Definition statement

This group covers:

Subject matter under group H01R 13/6461 comprising arrangements in which cross-talk between two pairs of conductors is reduced by the addition of at least one pair of twisted wires, each wire of which is connected to one conductor of each of the pairs of conductors.

(Example: US 5899770)

Title – H01R 13/6464

by adding capacitive elements

Definition statement

This group covers:

Subject matter under group H01R 13/6461 comprising arrangements in which cross-talk between two pairs of conductors is reduced by the addition of a capacitive coupling element between at least one conductor of each pair.

(Examples: US 5439384; US 5152699; 5213522; US 5647768)

Title – H01R 13/6466

on substrates, e.g. PCBs [Printed Circuit Boards]

Definition statement

This group covers:

Subject matter under H01R 13/6464 in which the capacitive coupling element is formed on a substrate or a circuit board.

Title – H01R 13/6467

by cross-over of signal conductors

Definition statement

This group covers:

Subject matter under group H01R 13/6461 in which cross-talk between pairs of conductors is reduced by crossing one conductor of each pair over the other conductor.

Title - H01R 13/6469

on substrates

Definition statement

This group covers:

Subject matter under group H01R 13/6467 in which at least part of a conductor is mounted on a planar support.

Title - H01R 13/6471

by special arrangement of ground and signal conductors e.g. GSGS [Ground-Signal-Ground-Signal]

Definition statement

This group covers:

Subject matter under group H01R 13/6461 comprising structural relationships of signal-carrying and ground conductors in a coupling device specifically for reducing cross-talk.

Title - H01R 13/6473

Impedance matching

Definition statement

This group covers:

Subject matter under group H01R 13/646 comprising coupling devices whose impedance is tuned to the impedance of the circuit to which it is connected.

Title - H01R 13/6474

by variation of conductive properties, e.g. by dimension variations

Definition statement

This group covers:

Subject matter under group H01R 13/6473 wherein the impedance of the coupling is tuned by varying the properties of a conductive element within the device, e.g. by varying the shape or material of the conductive element.

Title - H01R 13/6476

by making an aperture, e.g. hole

Definition statement

This group covers:

Subject matter under group H01R 13/6474 wherein the shape of the conductive element includes a hole.

Title – H01R 13/6477

by variation of dielectric properties

Definition statement

This group covers:

Subject matter under group H01R 13/6473 wherein the impedance of the coupling is tuned by varying the properties of a dielectric component within the device, e.g. by varying the shape or material of the dielectric component.

Title - H01R 13/648

Protective earth or shield arrangements on coupling devices

References relevant to classification in this group

This group does not cover:

Coaxially arranged shields	H01R 24/38

Title - H01R 13/658

High frequency shielding arrangements, e.g. against EMI [Electro-Magnetic Interference] or EMP [Electro-Magnetic Pulse]

Definition statement

This group covers:

Subject matter under group H01R 13/648 comprising a conductive means for preventing or reducing (a) detrimental effects induced within a connector or contact due to capacitive or inductive coupling with electric or magnetic fields generated from a source outside of the connector or contact, (b) induced electrical interference or signal loss due to capacitive or inductive coupling between mutually insulated contacts within a plural-contact connector, (i.e. reducing cross-talk), or (c) undesirable loss of electrical information or signal due to electrical radiation of signal from connector or contact.

Title - H01R 13/6581

Shield structure

Definition statement

This group covers:

Subject matter under group H01R 13/658 comprising details of the shape or construction of a shield.

Title - H01R 13/6582

with resilient means for engaging mating connector

Definition statement

This group covers:

Subject matter under group H01R 13/6581 comprising shielding arrangements including a resilient means on one connector for engaging a mating connector.

Title - H01R 13/6583

with separate conductive resilient members between mating shield members

Definition statement

This group covers:

Subject matter under group H01R 13/6582 including additional resilient means for electrically connecting the shields of two mating connectors.

(Examples: US 4808126; US 4544227; US 4655533)

Title - H01R 13/6584

formed by conductive elastomeric members, e.g. flat gaskets or O-rings

Definition statement

This group covers:

Subject matter under group H01R 13/6583 wherein the separate resilient means comprises a conductive material having elastic properties.

(Examples: US 5317105; US 4401355)

Title - H01R 13/6585

Shielding material individually surrounding or interposed between mutually spaced contacts

Definition statement

This group covers:

Subject matter under group H01R 13/6581 comprising conductive material either (a) formed around but spaced apart from at least a portion of at least one contact, so that the contact is inductively shielded from one or more other contacts, or (b) interposed between two or more contacts, so that the contacts are inductively shielded from one another.

(Examples: US 6527587; US 6923664; US 6939173)

Title - H01R 13/6586

for separating multiple connector modules

Definition statement

This group covers:

Subject matter under group H01R 13/6585 wherein the shielding material separates two or more assemblies of plural contacts.

Title - H01R 13/6587

for mounting on PCBs

Definition statement

This group covers:

Subject matter under group H01R 13/6586 wherein the shield has means to facilitate mounting on a printed circuit board.

Title - H01R 13/6588

with through openings for individual contacts

Definition statement

This group covers:

Subject matter under group H01R 13/6585 wherein the shield has apertures corresponding to individual contacts.

(Example: US 4070084)

Title - H01R 13/6589

with wires separated by conductive housing parts

Definition statement

This group covers:

Subject matter under group H01R 13/6585 wherein the shield includes a conductive wall portion that separates enclosed wires.

(Examples: US 4405187; US 6135817)

Title - H01R 13/659

with plural ports for distinct connectors

Definition statement

This group covers:

Subject matter under group H01R 13/6581 wherein the shield encloses two or more connectors.

(Examples: US 6908346; US 6575761; US 6733332; US 6722924)

Title - H01R 13/6591

Specific features or arrangements of connection of shield to conductive members

Definition statement

This group covers:

Subject matter under group H01R 13/658 including specific features of a connection between the conductive shield and a conductive member of the connector or another component.

Title - H01R 13/6592

the conductive member being a shielded cable

Definition statement

This group covers:

Subject matter under group H01R 13/6591 wherein the connection is to an external conductive sheath of an electric cable.

Title - H01R 13/6593

the shield being composed of different pieces

Definition statement

This group covers:

Subject matter under group H01R 13/6592 wherein the shield is comprised of assembled parts.

Title - H01R 13/6594

the shield being mounted on a PCB and connected to conductive members

Definition statement

This group covers:

Subject matter under group H01R 13/6591 wherein the shield is mounted on a printed circuit board and is electrically connected to a conductor on the circuit board.

Title - H01R 13/6595

with separate members fixing the shield to the PCB

Definition statement

This group covers:

Subject matter under group H01R 13/6594 wherein the shield is attached to the printed circuit board by a separate element or member.

(Examples: US4824398; US4337989; US4889502)

Title - H01R 13/6596

the conductive member being a metal grounding panel

Definition statement

This group covers:

Subject matter under group H01R 13/6591 including specific features of a connection between the conductive shield and an electrically grounded metal panel.

(Examples: US 5064388; US 3366918; US 5647765)

Title - H01R 13/6597

the conductive member being a contact of the connector

Definition statement

This group covers:

Subject matter under group H01R 13/6591 including specific features of a connection between the conductive shield and a contact of the connector.

(Examples: US 2797397; US 6540556)

Title - H01R 13/6598

Shield material

Definition statement

This group covers:

Subject matter under group H01R 13/658 comprising the composition or properties of the shielding material.

Title - H01R 13/6599

Dielectric material made conductive, e.g. plastic material coated with metal

Definition statement

This group covers:

Subject matter under group H01R 13/6598 comprising a dielectric material having conductive additives or coatings.

(Example: US 5509823)

Title - H01R 13/66

Structural association with built-in electrical component

Definition statement

This group covers:

Subject matter under group H01R 13/00 comprising details of the structural relationship of a coupling device other than a non-coaxial connector and an electrical component housed within the device.

References relevant to classification in this group

This group does not cover:

Coupling devices having concentrically or coaxially-arranged contacts	H01R 24/38- 24/56

Title - H01R 13/68

with built-in fuse

Definition statement

This group covers:

Subject matter under group H01R 13/66 wherein the built-in electrical component is a fusible circuit breaker.

Title - H01R 13/684

the fuse being removable

Definition statement

This group covers:

Subject matter under group H01R 13/68 wherein the built-in fuse is removable from the coupling device.

Title - H01R 13/688

with housing part adapted for accessing the fuse

Definition statement

This group covers:

Subject matter under group H01R 13/684 wherein the coupling device includes an opening or a removable or repositionable portion which permits access to the built-in removable fuse.

Title - H01R 13/692

Turnable housing part

Definition statement

This group covers:

Subject matter under group H01R 13/688 wherein the housing part is rotatable, e.g. threadably connected or hinged, to permit access to the built-in removable fuse.

Title - H01R 13/696

the fuse being integral with the terminal, e.g. pin or socket

Definition statement

This group covers:

Subject matter under group H01R 13/68 wherein the built-in fuse is irremovably attached to a contact of the coupling device.

Title - H01R 13/717

with built-in light source

Definition statement

This group covers:

Subject matter under group H01R 13/66 wherein in the built-in electrical component is an electric light source.

Title - H01R 13/719

specially adapted for high frequency, e.g. with filters

Definition statement

This group covers:

Subject matter under group H01R 13/66 comprising coupling devices having built-in electrical components or other features which adapt for use with high frequency alternating currents or voltages.

Glossary of Terms

Hereafter, in this group, the term “ filter” is used in the sense of a “noise-reducing member”.

Title - H01R 13/7193

with ferrite filters

Definition statement

This group covers:

Subject matter under group H01R 13/719 wherein the built-in electrical component is a ferrite filter.

Title - H01R 13/7195

with planar filters with openings for contacts

Definition statement

This group covers:

Subject matter under group H01R 13/719 wherein the built-in electrical component consists of a flat, i.e. essentially two-dimensional, filter circuit device, e.g. a PCB with a filter fixed thereon, with apertures to permit engagement of mating contacts.

(Examples: US 4729752; US 6183300)

Title - H01R 13/7197

with filters integral with or fitted onto contacts, e.g. tubular filters

Definition statement

This group covers:

Subject matter under group H01R 13/719 wherein the built-in electrical component consists of a filter integral with, or fitted onto, at least one connector contact.

(Example: US 6431916)

IPC/A 022
ORIGINAL: English/French
DATE: 25.11.2009

WORLD INTELLECTUAL PROPERTY ORGANIZATION
ORGANISATION MONDIALE DE LA PROPRIÉTÉ INTELLECTUELLE

GENEVA/GENÈVE

COMMITTEE OF EXPERTS OF THE IPC UNION
COMITÉ D'EXPERTS DE L'UNION DE L'IPC

AL REVISION PROJECT FILE
DOSSIER DE PROJET RÉVISION NIVEAU ÉLEVÉ

PROPOSAL BY : **EP** **PROPOSITION DE :**	**IPC AREA:** **H01R 24/00** **DOMAINE DE LA CIB :**
RAPPORTEUR : **EP**	**TECHNICAL FIELD :** **E** **DOMAINE TECHNIQUE :**

ANNEX/ ANNEXE	CONTENT/CONTENU		ORIGIN/ ORIGINE	DATE
1	Decision of the subcommittee	Décision du cous-comité	IB	18.12.2008
2	Initial Proposal	Proposition Initiale	EP	19.12.2008
3	Comments	Observations	JP	24.12.2008
4	Comments	Observations	US	25.12.2008
5	Comments	Observations	IB	04.02.2009
6	Rapporteur summary for the next ALS		EP	19.02.2009
7	Comments	Observations	DE	13.03.2009
8	Decision of the subcommittee	Décision du cous-comité	IB	24.03.2009
9	Comments	Observations	US	30.04.2009
10	Rapporteur report	Rapport du rapporteur	EP	05.06.2009
11	Proposal - scheme	Proposition - schéma	EP	05.06.2009
12	French version	Version française	IB	12.06.2009
13	Working Group decision	Décision du groupe de travail	IB	03.08.2009
14	List of cross references	Liste des renvois	IB	31.08.2009
15	Comments	Observations	JP	06.10.2009
16	Proposal - RCL	Proposition - RCL	EP	30.10.2009
17	Proposal - scheme	Proposition - schéma	EP	30.10.2009

ANNEX/ ANNEXE	CONTENT/CONTENU		ORIGIN/ ORIGINE	DATE
18	Comments - French version	Observations - Version française	FR	04.11.2009
19	Proposal - definitions	Proposition - définitions	EP	17.11.2009
20	Comments	Observations	SE	24.11.2009
21	Comments	Observations	DE	25.11.2009

ANNEXE 1E,F H01R [Projet-Rapporteur : A022/US] <WG21>

EN: 24/20 AL , N	•	*Coupling parts carrying sockets, clips, or analogous counter contacts and secured only to wire or cable*	*Pièces de couplage portant des douilles, des pinces ou des contacts complémentaires analogues, assujetties uniquement à un fil ou un câble*
EN: 24/22 AL , N	• •	*with additional earth or shield contact*	*avec contact supplémentaire de mise à la terre ou de blindage*
EN: 24/28 AL , N	•	*Coupling parts carrying pins, blades or analogous contacts and secured only to wire or cable*	*Pièces de couplage portant des broches, des lames ou des contacts analogues, assujetties uniquement à un fil ou un câble*
EN: 24/30 AL , N	• •	*with additional earth or shield contact*	*avec contact supplémentaire de mise à la terre ou de blindage*
EN: 24/38 AL , N	•	*having concentrically or coaxially-arranged contacts*	*ayant des contacts disposés concentriquement ou coaxialement*
EN: 24/40 AL , N	• •	*specially adapted for high frequency*	*spécialement adaptés à la haute fréquence*
EN: 24/42 AL , N	• • •	*comprising impedance matching means or electrical components, e.g. filters or switches*	*comprenant des moyens d'adaptation d'impédance ou des composants électriques, p.ex. des filtres ou des interrupteurs*
EN: 24/44 AL , N	• • • •	*comprising impedance matching means*	*comprenant des moyens d'adaptation d'impédance*
EN: 24/46 AL , N	• • • •	*comprising switches*	*comprenant des interrupteurs*
EN: 24/48 AL , N	• • • •	*comprising protection devices, e.g. overvoltage protection*	*comprenant des dispositifs de protection, p.ex. de protection contre les surtensions*
EN: 24/50 AL , N	• • •	*mounted on a printed circuit board*	*montés sur une carte de circuits imprimés*
EN: 24/52 AL , N	• • •	*mounted in or to a panel or structure*	*montés dans ou sur un panneau ou une structure*
EN: 24/54 AL , N	• • •	*Intermediate parts, e.g. adapters, splitters or elbows*	*Pièces intermédiaires, p.ex. adaptateurs, répartiteurs ou coudes*
EN: 24/56 AL , N	• • •	*characterised by the shape of the cable, e.g. corrugated cable, twisted pair cable, cables with two screens or hollow cable*	*caractérisées par la forme du câble, p.ex. câble ondulé, câble à paires torsadées, câble double blindage ou câble creux*
EN: 24/58	•	*Contacts spaced along longitudinal axis of*	*Contacts espacés le long de l'axe longitudinal*

AL , N	*engagement*	*de mise en prise*
EN: 24/60 AL , N	• *Contacts spaced along planar side wall transverse to longitudinal axis of engagement*	*Contacts espacés le long de la paroi latérale plane transversalement par rapport à l'axe longitudinal de mise en prise*
EN: 24/62 AL , N	• • *Sliding engagements with one side only, e.g. modular jack coupling devices*	*Mise en prise par glissement avec une face uniquement, p.ex. dispositif de couplage à prise modulaire*
EN: 24/64 AL , N	• • • *for high frequency e.g. RJ 45*	*pour haute fréquence, p.ex. RJ 45*
EN: 24/66 AL , N	• *with current-carrying pins, blades or analogous contacts and secured to apparatus or structure, e.g. to a wall*	*avec des broches, des lames ou des contacts analogues parcourus par un courant, assujettis à l'appareil ou à la structure, p.ex. à une paroi*
EN: 24/68 AL , N	• • *mounted on directly pluggable apparatus*	*montés sur un appareil directement enfichable*
EN: 24/70 AL , N	• • *with additional earth or shield contact*	*avec contact supplémentaire de mise à la terre ou de blindage*
EN: 24/76 AL , N	• *with sockets, clips or analogous contacts and secured to apparatus or structure, e.g. to a wall*	*avec des broches, des pinces ou des contacts analogues, assujettis à l'appareil ou à la structure, p.ex. à une paroi*
EN: 24/78 AL , N	• • *with additional earth or shield contact*	*avec contact supplémentaire de mise à la terre ou de blindage*
EN: 24/84 AL , N	• *Hermaphroditic coupling devices*	*Dispositifs de couplage hermaphrodite*
EN: 24/86 AL , N	• *Parallel contacts arranged about a common axis*	*Contacts parallèles disposés autour d'un axe commun*
EN: 24/02 AL , D	*< transferred to H01R24/38 + sub groups >*	*transféré en H01R24/38 + sous-groupes*
EN: 24/04 AL , D	*< transferred to H01R24/58 >*	*transféré en H01R24/58*
EN: 24/06 AL , D	*< transferred to H01R24/28, H01R 24/66>*	*transféré en H01R24/00, H01R 24/66*
EN: 24/08 AL , D	*< transferred to H01R24/30 , H01R24/70>*	*transféré en H01R24/00, H01R24/70*
EN: 24/10 AL , D	*< transferred to H01R24/20, H01R24/76 >*	*transféré en H01R24/20, H01R24/76*

EN: 24/12 AL , D	*< transferred to H01R24/22, H01R24/78>*	*transféré en H01R24/22, H01R24/78*
EN: 24/14 AL , D	*< transferred to H01R24/66*	*transféré en H01R24/66*
EN: 24/16 AL , D	*< transferred to H01R24/76 >*	*transféré en H01R24/76*
EN: 24/18 AL , D	*< transferred to H01R24/84 >*	*transféré en H01R24/84*

Schéma existant pour aide à la traduction.

H01R 24/00		**Two-part coupling devices, or either of their cooperating parts, characterised by their overall structure** (specially adapted for printed circuits, flat or ribbon cables, or like structures**H01R 12/00**; specially adapted for supporting **apparatus H01R 33/00**) **[7]** **Dispositifs de couplage en deux pièces, ou l'une des pièces qui coopèrent dans ces dispositifs, caractérisés par leur structure générale** (spécialement conçus pour des circuits imprimés, des câbles plats ou à ruban ou des structures similaires**H01R 12/00**; spécialement conçus pour supporter un **appareil H01R 33/00**) **[7]**
		Note(s) In this group, it is desirable to add the indexing codes of groups **H01R 101/00**-**H01R 107/00**. Note(s) Dans le présent groupe, il est souhaitable d'ajouter les codes d'indexation des groupes**H01R 101/00**-**H01R 107/00**.
	H01R 24/02	· having concentrically or coaxially-arranged contacts (**H01R 24/04** takes precedence) **[7]** ayant des contacts concentriques ou coaxiaux (**H01R 24/04** a priorité) **[7]**
	H01R 24/04	· having the contacts of each coupling part arranged in line parallel with the direction of coupling-engaging motion, e.g. telephone-jack type **[7]** ayant les contacts de chaque pièce de couplage placés en ligne parallèle à la direction du mouvement du couplage, p.ex. du type jack de téléphone **[7]**
	H01R 24/06	· with current-carrying pins, blades, or analogous contacts, having their axes parallel to each other and slidingly cooperating with separate sockets, clips, or analogous counter-contacts **[7]** avec des broches, lames ou contacts analogues de transport de courant, ayant leurs axes parallèles entre eux et coopérant par glissement avec des alvéoles, pinces ou contacts complémentaires analogues **[7]**
	H01R 24/08	· · with earth or shield contact **[7]** avec un contact de terre ou d'écran **[7]**
	H01R 24/10	· with current carrying sockets, clips or analogous contacts, having their axes parallel to each other and slidingly cooperating with separate pins, blades or analogous counter-contacts **[7]** avec des alvéoles, des pinces ou des contacts analogues de transport de courant, ayant leurs axes parallèles entre eux et coopérant par glissement avec des broches, des lames ou des contacts complémentaires analogues **[7]**
	H01R 24/12	· · with earth or shield contact **[7]** avec un contact de terre ou d'écran **[7]**

	H01R 24/14	· with current-carrying pins, blades or analogous contacts and secured to **apparatus** or structure, e.g. to a wall **[7]** avec des broches, des lames ou des contacts analogues de transport de courant, assujettis à l' **appareil** ou à la structure, p.ex. à une paroi **[7]**	
	H01R 24/16	· with current-carrying sockets, clips or analogous contacts and secured to **apparatus** or structure, e.g. to a wall **[7]** avec des alvéoles, des pinces ou des contacts analogues de transport de courant, assujettis à l' **appareil** ou à la structure, p.ex. à une paroi **[7]**	
	H01R 24/18	· Hermaphroditic coupling devices **[7]** Dispositifs de couplage hermaphrodite **[7]**	

EXCERPT FROM DOCUMENT IPC/WG/21/2
EXTRAIT DU DOCUMENT IPC/WG/21/2

REPORT ON THE SEVENTH SESSION OF THE IPC ADVANCED LEVEL SUBCOMMITTEE

17. Since the seventh session of the ALS was the final one, all pending A projects were included in the program of the Working Group. From now on, A projects will designate revision projects originating from the IP5 Offices and C projects will designate revision projects that would be included in the IPC revision program by the Committee. For practical reasons, the schemes adopted by the ALS in the framework of projects A 012, A 013, A 014, A 017, A 018 and A 020 were included in the Technical Annexes of this session (see Technical Annexes 1 to 7 and 9 to this report).

IPC REVISION PROGRAM

General

25. The Working Group noted the decision by the Committee of Experts at its forty-first session that revision projects, including advanced level revision projects, would be considered by the Working Group and forwarded to the Committee for final adoption after completion. It was noted that projects originating from the Trilateral or the IP5 Offices cooperation will be designated by the letter “A” and revision projects included in the IPC revision program by the Committee will be designated by the letter “C” (see paragraph 17, above).

26. Discussions were based on compilations of the relevant revision project files. The Working Group considered nine pending C projects, plus 17 A projects forwarded from the former ALS, and approved amendments relating to those projects (see Technical Annexes 1 to 29 to this report relating to revision projects). The status of those projects and the list of future actions and deadlines are indicated in Annex III to this report.

IPC Revision Projects

27. The Working Group made the following observations with respect to the IPC revision projects. All references to annexes in this paragraph refer to annexes of the corresponding project file, unless otherwise stated.

Project A 022 (electrical) – The English version of Annex 22 was approved with some amendments (see Technical Annex 11E to this report).

The Rapporteur was requested to consider whether the wording of the approved title of subgroup H01R 24/56 correctly reflected, or could better reflect the relationship between the “cable” and the “contact”.

The Rapporteur was invited to prepare definitions and a RCL, and the International Bureau was requested to provide a CRL.

Comments were also invited on the French version of Annex 12.

RAPPORT SUR LA SEPTIÈME SESSION DU SOUS-COMITÉ CHARGÉ DU NIVEAU ÉLEVÉ DE LA CIB

17. Étant donné que la septième session de l’ALS était la dernière, tous les projets A en instance ont été inscrits au programme du groupe du travail. Dorénavant, les projets A désigneront les projets de révision émanant des offices de l’IP5 et les projets C désigneront les projets de révision qui seront inscrits au programme de révision de la CIB par le comité. Pour des raisons pratiques, les schémas adoptés par l’ALS dans le cadre des projets A 012, A 013,

A 014, A 017, A 018 et A 020 ont été inclus dans les annexes techniques du rapport sur la session en cours (voir les annexes techniques 1 à 7 et 9 du présent rapport).

PROGRAMME DE RÉVISION DE LA CIB

Généralités

25. Le groupe de travail a pris note de la décision prise par le comité d'experts à sa quarante et unième session selon laquelle les projets de révision, y compris ceux relatifs au niveau élevé, seront examinés par le groupe de travail et transmis au comité pour adoption définitive une fois achevés. Il a été pris note du fait que les projets émanant des offices de la coopération trilatérale ou de l'IP5 seraient désignés par la lettre "A" et que les projets de révision inscrits au programme de révision de la CIB par le comité seraient désignés par la lettre "C" (voir le paragraphe 17).

26. Les délibérations ont eu lieu sur la base de synthèses des dossiers de projet correspondants. Le groupe de travail a examiné neuf projets C en instance ainsi que 17 projets A transmis par l'ancien ALS et a approuvé les modifications relatives à ces projets (voir les annexes techniques 1 à 29 du présent rapport relatives aux projets de révision). L'état d'avancement de ces projets et la liste des mesures à prendre et des délais correspondants font l'objet de l'annexe III du présent rapport.

Projets de révision de la CIB

27. Le groupe de travail a formulé les observations ci-après concernant les projets de révision de la CIB. Dans le présent paragraphe, tout renvoi à des annexes désigne, sauf indication contraire, les annexes du dossier de projet correspondant.

Projet A 022 (électricité) – La version anglaise figurant à l'annexe 22 a été approuvée sous réserve de certaines modifications (voir l'annexe technique 11E du présent rapport).

Le rapporteur a été prié de déterminer si le libellé du titre approuvé du sous-groupe H01R 24/56 rendait correctement compte ou pourrait mieux rendre compte du lien entre le "câble" et la "connexion".

Le rapporteur a été invité à établir des définitions et une table de concordance et le Bureau international a été prié d'établir une table des renvois croisés.

Des observations ont également été demandées sur la version française figurant à l'annexe 12.

ANNEX 11E H01R [Project-Rapporteur : A022/EP <WG21>]

CL C ***24/00 Two-part coupling devices, or either of their cooperating parts, characterised by their overall structure*** *(specially adapted for printed circuits, flat or ribbon cables, or like structures* ***H01R 12/00****; specially adapted for supporting apparatus* ***H01R 33/00****)*

AL D 24/02 (transferred to **H01R 24/38**)

AL D 24/04 (transferred to **H01R 24/58**)

AL D 24/06 (transferred to **H01R 24/28**,**H01R 24/66**)

AL D 24/08 (transferred to **H01R 24/30**,**H01R 24/70**)

AL D 24/10 (transferred to **H01R 24/20**,**H01R 24/76**)

AL D 24/12 (transferred to **H01R 24/22**,**H01R 24/78**)

AL D 24/14 (transferred to **H01R 24/66**)

AL D 24/16 (transferred to **H01R 24/76**)

AL D 24/18 (transferred to **H01R 24/84**)

AL N *24/20* · *Coupling parts carrying sockets, clips or analogous contacts and secured only to wire or cable*

AL N *24/22* · · *with additional earth or shield contacts*

AL N *24/28* · *Coupling parts carrying pins, blades or analogous contacts and secured only to wire or cable*

AL N *24/30* · · *with additional earth or shield contacts*

AL N *24/38* · *having concentrically or coaxially arranged contacts*

AL N *24/40* · · *specially adapted for high frequency*

AL N *24/42* · · · *comprising impedance matching means or electrical components, e.g. filters or switches*

AL N *24/44* · · · · *comprising impedance matching means*

AL N *24/46* · · · · *comprising switches*

AL N *24/48* · · · · *comprising protection devices, e.g. overvoltage protection*

AL N *24/50* · · · *mounted on a PCB [Printed Circuit Board]*

AL N *24/52* · · · *mounted in or to a panel or structure*

AL N *24/54* · · · *Intermediate parts, e.g. adapters, splitters or elbows*

AL N *24/56* · · · *characterised by the shape of the cable, e.g. corrugated cable, twisted pair cable, cable with two screens or hollow cable*

AL N *24/58* · *Contacts spaced along longitudinal axis of engagement*

AL N *24/60* · *Contacts spaced along planar side wall transverse to longitudinal axis of engagement*

AL N *24/62* · · *Sliding engagements with one side only, e.g. modular jack coupling devices*

AL N *24/64* · · · *for high frequency, e.g. RJ 45*

AL N *24/66* · *with pins, blades or analogous contacts and secured to apparatus or structure, e.g. to a wall*

AL N *24/68* · · *mounted on directly pluggable apparatus*

AL N *24/70* · · *with additional earth or shield contacts*

AL N *24/76* · *with sockets, clips or analogous contacts and secured to apparatus or structure, e.g. to a wall*

AL N *24/78* · · *with additional earth or shield contacts*

AL N *24/84* · *Hermaphroditic coupling devices*

AL N *24/86* · *Parallel contacts arranged about a common axis*

WORLD INTELLECTUAL PROPERTY ORGANIZATION	
IPC REVISION WORKING GROUP	
Project: **A 022:** H01R 24/00 List of cross references	Date: June, 2009

References affected by revision project A022 (H01R 24/00)

Del. or C-mod. existing group	**Ref to this group**	**Proposed amendment**	**Comment**
H01R 24/00	Several places	No action needed	
H01R 24/02	H01R 13/646	Done in WG/21 (see TAs)	
H01R 24/04	H04M 5/02	Constructional details (jacks, jack-plugs H01R 24/~~94~~ 58)	
H01R 24/06	None	None	
H01R 24/08	None	None	
H01R 24/10	None	None	
H01R 24/12	None	None	
H01R 24/14	None	None	
H01R 24/16	None	None	
H01R 24/18	None	None	

Principal Directorate Patent Grant Automation - Directorate Classification		
Project: **A022**	Overall structure of electrical connectors	IPC range: **H01R 24**
Revision Concordancy List		28 Oct 2009

OLD	NEW	COMMENTS
H01R 24/02	H01R 24/38 to H01R 24/56	
H01R 24/04	H01R 24/58	
H01R 24/06	H01R 24/28, H01R 24/66 to H01R 24/68	
H01R 24/08	H01R 24/30, H01R 24/70	
H01R 24/10	H01R 24/20, H01R24/86, H01R 24/60 to H01R24/64	
H01R 24/12	H01R 24/22, H01R 24/78	
H01R 24/14	H01R 24/66 to H01R 24/70	
H01R 24/16	H01R 24/76	
H01R 24/18	H01R 24/84	

Principal Directorate Patent Grant Automation - Directorate Classification		
Project: A022	**Overall structure of electrical connectors**	**IPC range: H01R 24**
Scheme proposal		**28 Oct 2009**

Ref: Annex 13, IB Working Group decision, 03-Aug-09

Regarding the questions raised in Annex 13, R agrees with the observations of the Working Group that the wording of the title of subgroup H01R 24/56 might be improved to better reflect the relationship between cable and contact.
Although the present wording of the title H01R 24/56 . . . "characterized by the shape of the cable", ... corresponds to the ECLA H01R17/12R, it is however considered more profitable to change to "specially adapted to a specific shape of the cable".

R therefore proposes the following amendment:

H01R ***24/56*** **. . .** **specially adapted to a specific shape of the cable** ~~***characterised by the shape of the cable***~~***, e.g. corrugated cable, twisted pair cable, cable with two screens or hollow cable***

This results in the following scheme proposal:

FROM H01R [Project-Rapporteur : A022/EP] <WG21>
ANNEX 11E

CL C ***24/00*** ***Two-part coupling devices, or either of their cooperating parts, characterised by their overall structure (specially adapted for printed circuits, flat or ribbon cables, or like structures H01R 12/00; specially adapted for supporting apparatus H01R 33/00)***

AL D 24/02 (transferred to H01R 24/38)

AL D 24/04 (transferred to H01R 24/58)

AL D 24/06 (transferred to H01R 24/28,H01R 24/66)

AL D 24/08 (transferred to H01R 24/30,H01R 24/70)

AL D 24/10 (transferred to H01R 24/20,H01R 24/76)

AL D 24/12 (transferred to H01R 24/22,H01R 24/78)

AL D 24/14 (transferred to H01R 24/66)

AL D 24/16 (transferred to H01R 24/76)

AL D 24/18 (transferred to H01R 24/84)

AL N ***24/20*** **·** ***Coupling parts carrying sockets, clips or analogous contacts and secured only to wire or cable***

AL N ***24/22*** **· ·** ***with additional earth or shield contacts***

AL N ***24/28*** **·** ***Coupling parts carrying pins, blades or analogous contacts and secured only to wire or cable***

AL N ***24/30*** **· ·** ***with additional earth or shield contacts***

AL N ***24/38*** **·** ***having concentrically or coaxially arranged contacts***

AL N ***24/40*** **· ·** ***specially adapted for high frequency***

AL N ***24/42*** **· · ·** ***comprising impedance matching means or electrical components, e.g. filters or switches***

AL N ***24/44*** **· · · ·** ***comprising impedance matching means***

AL N ***24/46*** **· · · ·** ***comprising switches***

AL N ***24/48*** **· · · ·** ***comprising protection devices, e.g. overvoltage protection***

AL **N** ***24/50*** · · · ***mounted on a PCB [Printed Circuit Board]***

AL **N** ***24/52*** · · · ***mounted in or to a panel or structure***

AL **N** ***24/54*** · · · ***Intermediate parts, e.g. adapters, splitters or elbows***

AL **N** ***24/56*** · · · **specially adapted to a specific shape of the cable** ~~***characterised by the shape of the cable***~~***, e.g. corrugated cable, twisted pair cable, cable with two screens or hollow cable***

AL **N** ***24/58*** · ***Contacts spaced along longitudinal axis of engagement***

AL **N** ***24/60*** · ***Contacts spaced along planar side wall transverse to longitudinal axis of engagement***

AL **N** ***24/62*** · · ***Sliding engagements with one side only, e.g. modular jack coupling devices***

AL **N** ***24/64*** · · · ***for high frequency, e.g. RJ 45***

AL **N** ***24/66*** · ***with pins, blades or analogous contacts and secured to apparatus or structure, e.g. to a wall***

AL **N** ***24/68*** · · ***mounted on directly pluggable apparatus***

AL **N** ***24/70*** · · ***with additional earth or shield contacts***

AL **N** ***24/76*** · ***with sockets, clips or analogous contacts and secured to apparatus or structure, e.g. to a wall***

AL **N** ***24/78*** · · ***with additional earth or shield contacts***

AL N ***24/84*** · ***Hermaphroditic coupling devices***

AL N ***24/86*** · ***Parallel contacts arranged about a common axis***

Roland Tappeiner
Ruben de Bekker

ANNEXE 1E,F H01R [Projet-Rapporteur : A022/US] <WG21>

Commentaire FR sur la proposition de version française :
en H01R-24/58, 24/60 et 24/62 nous avons remplacé « mise en prise » par « engagement »

EN: 24/20 AL , N	• *Coupling parts carrying sockets, clips, or analogous counter contacts and secured only to wire or cable*	*Pièces de couplage portant des douilles, des pinces ou des contacts complémentaires analogues, assujetties uniquement à un fil ou un câble*
EN: 24/22 AL , N	• • *with additional earth or shield contact*	*avec contact supplémentaire de mise à la terre ou de blindage*
EN: 24/28 AL , N	• *Coupling parts carrying pins, blades or analogous contacts and secured only to wire or cable*	*Pièces de couplage portant des broches, des lames ou des contacts analogues, assujetties uniquement à un fil ou un câble*
EN: 24/30 AL , N	• • *with additional earth or shield contact*	*avec contact supplémentaire de mise à la terre ou de blindage*
EN: 24/38 AL , N	• *having concentrically or coaxially-arranged contacts*	*ayant des contacts disposés concentriquement ou coaxialement*
EN: 24/40 AL , N	• • *specially adapted for high frequency*	*spécialement adaptés à la haute fréquence*
EN: 24/42 AL , N	• • • *comprising impedance matching means or electrical components, e.g. filters or switches*	*comprenant des moyens d'adaptation d'impédance ou des composants électriques, p.ex. des filtres ou des interrupteurs*
EN: 24/44 AL , N	• • • • *comprising impedance matching means*	*comprenant des moyens d'adaptation d'impédance*
EN: 24/46 AL , N	• • • • *comprising switches*	*comprenant des interrupteurs*
EN: 24/48 AL , N	• • • • *comprising protection devices, e.g. overvoltage protection*	*comprenant des dispositifs de protection, p.ex. de protection contre les surtensions*
EN: 24/50 AL , N	• • • *mounted on a printed circuit board*	*montés sur une carte de circuits imprimés*
EN: 24/52 AL , N	• • • *mounted in or to a panel or structure*	*montés dans ou sur un panneau ou une structure*
EN: 24/54 AL , N	• • • *Intermediate parts, e.g. adapters, splitters or elbows*	*Pièces intermédiaires, p.ex. adaptateurs, répartiteurs ou coudes*
EN: 24/56 AL , N	• • • *characterised by the shape of the cable, e.g. corrugated cable, twisted pair cable, cables with two screens or hollow cable*	*caractérisées par la forme du câble, p.ex. câble ondulé, câble à paires torsadées, câble double blindage ou câble creux*

EN: 24/58 AL , N	• *Contacts spaced along longitudinal axis of engagement*	*Contacts espacés le long de l'axe longitudinal d'engagement*
EN: 24/60 AL , N	• *Contacts spaced along planar side wall transverse to longitudinal axis of engagement*	*Contacts espacés le long de la paroi latérale plane transversalement par rapport à l'axe longitudinal d'engagement*
EN: 24/62 AL , N	• • *Sliding engagements with one side only, e.g. modular jack coupling devices*	*Engagements par glissement avec une face uniquement, p.ex. dispositifs de couplage à prise modulaire*
EN: 24/64 AL , N	• • • *for high frequency e.g. RJ 45*	*pour haute fréquence, p.ex. RJ 45*
EN: 24/66 AL , N	• *with current-carrying pins, blades or analogous contacts and secured to apparatus or structure, e.g. to a wall*	*avec des broches, des lames ou des contacts analogues parcourus par un courant, assujettis à l'appareil ou à la structure, p.ex. à une paroi*
EN: 24/68 AL , N	• • *mounted on directly pluggable apparatus*	*montés sur un appareil directement enfichable*
EN: 24/70 AL , N	• • *with additional earth or shield contact*	*avec contact supplémentaire de mise à la terre ou de blindage*
EN: 24/76 AL , N	• *with sockets, clips or analogous contacts and secured to apparatus or structure, e.g. to a wall*	*avec des broches, des pinces ou des contacts analogues, assujettis à l'appareil ou à la structure, p.ex. à une paroi*
EN: 24/78 AL , N	• • *with additional earth or shield contact*	*avec contact supplémentaire de mise à la terre ou de blindage*
EN: 24/84 AL , N	• *Hermaphroditic coupling devices*	*Dispositifs de couplage hermaphrodite*
EN: 24/86 AL , N	• *Parallel contacts arranged about a common axis*	*Contacts parallèles disposés autour d'un axe commun*
EN: 24/02 AL , D	*< transferred to H01R24/38 + sub groups >*	*transféré en H01R24/38 + sous-groupes*
EN: 24/04 AL , D	*< transferred to H01R24/58 >*	*transféré en H01R24/58*
EN: 24/06 AL , D	*< transferred to H01R24/28, H01R 24/66>*	*transféré en H01R24/00, H01R 24/66*
EN: 24/08 AL , D	*< transferred to H01R24/30 , H01R24/70>*	*transféré en H01R24/00, H01R24/70*
EN: 24/10 AL ,	*< transferred to H01R24/20, H01R24/76 >*	*transféré en H01R24/20, H01R24/76*

D

EN: 24/12 AL , D	*< transferred to H01R24/22, H01R24/78>*	*transféré en H01R24/22, H01R24/78*
EN: 24/14 AL , D	*< transferred to H01R24/66*	*transféré en H01R24/66*
EN: 24/16 AL , D	*< transferred to H01R24/76 >*	*transféré en H01R24/76*
EN: 24/18 AL , D	*< transferred to H01R24/84 >*	*transféré en H01R24/84*

Principal Directorate Patent Grant Automation - Directorate Classification		
Project: A022	Overall structure of electrical connectors	IPC range: **H01R 24**
Proposal Definitions		11 Nov 2009

Title – H01R 24/00

Two-part coupling devices, or either of their cooperating parts, characterised by their overall structure

Definition statement

This main group covers:

Coupling devices attached to cables or attached to structures

Relationship between large subject matter areas

It is the overall structure of the coupling devices which is classified here, the details are classified in H01R 13/00

References relevant to classification in this main group

This main group does not cover:

Contact members	H01R 13/02
Securing contact members in or to a base or case; Insulating of contact members	H01R 13/40
Bases; Cases	H01R 13/46
Means for supporting coupling part when not engaged	H01R 13/60
Means for facilitating engagement or disengagement of coupling parts or for holding them in engagement	H01R 13/62
Means for preventing, inhibiting or avoiding incorrect coupling	H01R 13/64
Special adaptation for high-frequency, e.g. structures providing an impedance match or phase match	H01R 13/646
Special adaptation for high-frequency, e.g. structures providing an impedance match or phase match	H01R 13/648
Structural association with built-in electrical component	H01R 13/66
Coupling devices in which a holder is adapted for supporting apparatus to which its counterpart is attached; Separate parts thereof	H01R 33/00

Informative references

Attention is drawn to the following places, which may be of interest for search:

One pole	H01R 101/00
Two poles	H01R 103/00
Three poles	H01R 105/00
Four or more poles	H01R 107/00

Special rules of classification within this main group

An indexing code of the groups H01R 101/00 to H01R 107/00 should be given to each document

Glossary of terms

In this main group, the following terms (or expressions) are used with the meaning indicated:

Pin	male contact
Socket	female contact

Synonyms and Keywords

In patent documents the following abbreviations are often used:

USB	Universal serial bus

Title – H01R 24/20

Coupling parts carrying sockets, clips, or analogous counter contacts and secured only to wire or cable

Definition statement

This subgroup covers:

The subject matter under H01R 24/20 comprises cooperating parts having cavities with conducting properties extending into a support structure. At least one of the cavities is connected to an elongated electrical conductor attached to the support structure

Example: GB1575188

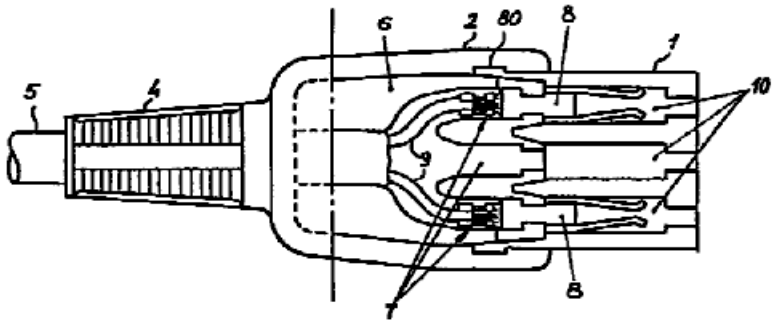

Title – H01R 24/22

with additional earth or shield contact

Definition statement

This subgroup covers:

The subject matter under H01R 24/22 comprises cooperating parts having cavities with conducting properties extending into a support structure. At least one of the cavities is connected to an elongated electrical conductor attached to the support structure, whereby the support structure comprises a grounding structure

Example: GB2042826

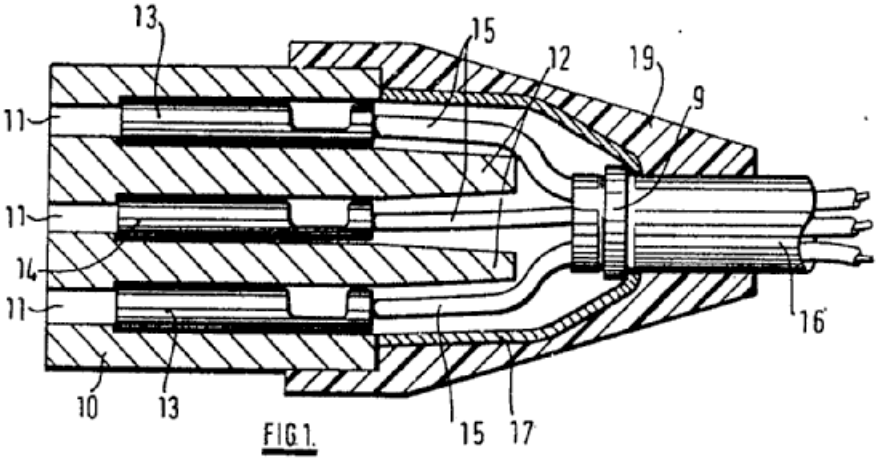

Title – H01R 24/28

Coupling parts carrying pins, blades or analogous contacts and secured only to wire or cable

Definition statement

This subgroup covers:

The subject matter under H01R 24/28 comprises cooperating parts having protruding members with conducting properties extending from a support. At least one of the protruding members is connected to an elongated electrical conductor

Example: FR2599902

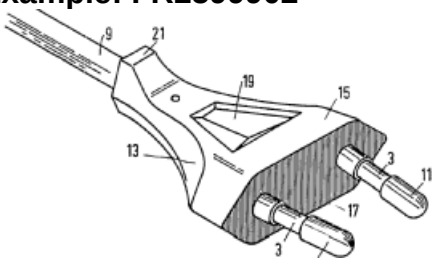

Title – H01R 24/30

with additional earth or shield contact

Definition statement

This subgroup covers:

The subject matter under H01R 24/30 comprises cooperating parts having protruding members with conducting properties extending from a support structure and connected to an elongated electrical conductor, whereby one conductor is grounded
Example: US5588870

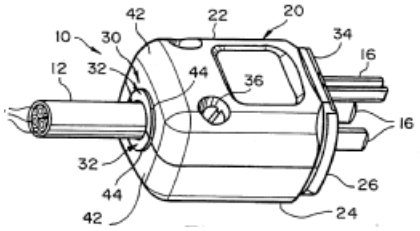

Title – H01R 24/38

having concentrically or coaxially-arranged contacts

Definition statement

This subgroup covers:

The subject matter under H01R 24/38 comprises cooperating parts having a center contact and cylindrical contacts concentrically disposed thereabout
Example: DE8424348U

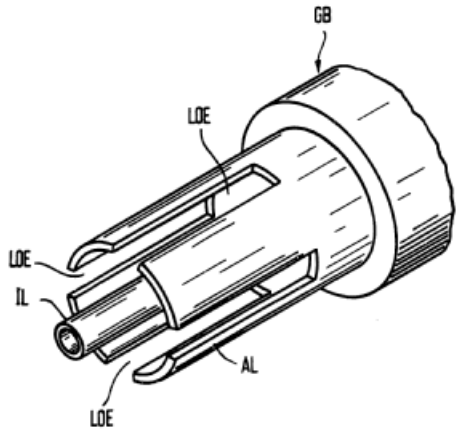

Title – H01R 24/40

specially adapted for high frequency

Definition statement

This subgroup covers:

The subject matter under H01R 24/40 comprises cooperating parts having a center contact and cylindrical contacts concentrically disposed thereabout and adapted for signals used for radio transmission
Example: DE19528552

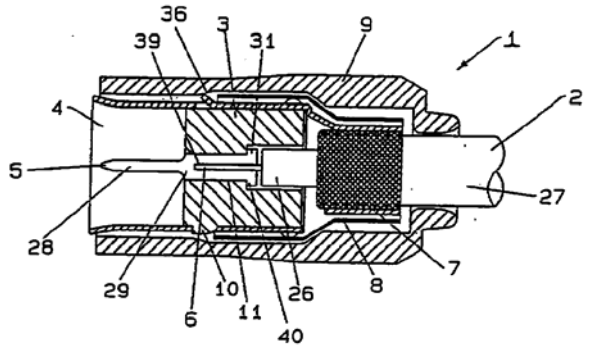

Title – H01R 24/42

comprising impedance matching means or electrical components, e.g. filters, switches

Definition statement

This subgroup covers:

The subject matter under H01R 24/42 comprises cooperating parts for radio transmission having a center contact and cylindrical contacts concentrically disposed thereabout and at least one component except components covered by H01R 24/46 or H01R 24/48
Example: US2002186101

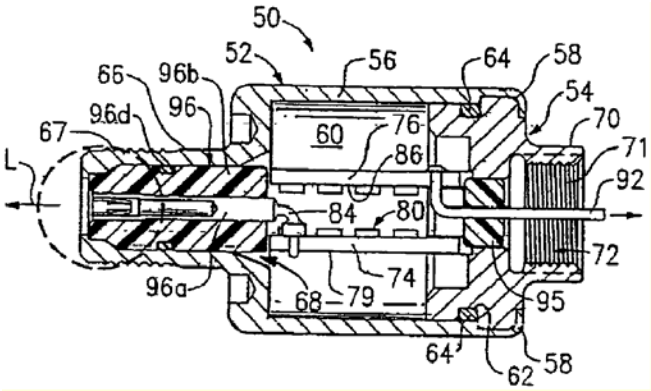

Title – H01R 24/44

comprising impedance matching

Definition statement

This subgroup covers:

The subject matter under H01R 24/44 comprises cooperating parts for radio transmission having a center contact and cylindrical contacts concentrically disposed thereabout and means for setting the output impedance of a signal source equal to the input impedance of the load to which it is ultimately connected, usually in order to maximize the power transfer and minimize reflections from the load
Example: US5474470

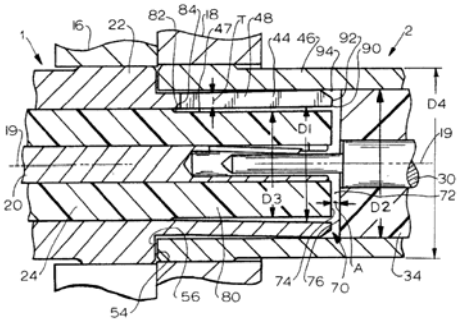

Title – H01R 24/46

comprising switches

Definition statement

This subgroup covers:

The subject matter under H01R 24/46 comprises cooperating parts for radio transmission having a center contact and a cylindrical contact concentrically disposed thereabout and means for interrupting, shorting or bypassing signals carried by the center contact
Example: US6142803

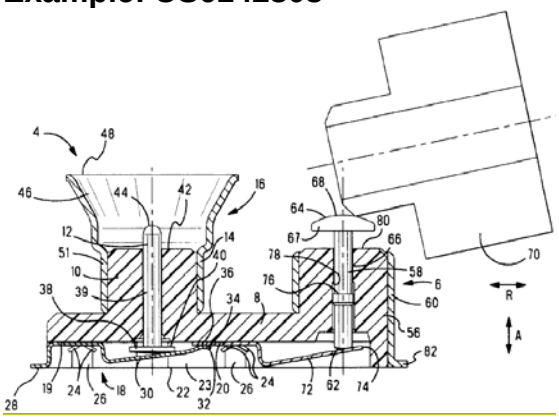

Title – H01R 24/48

comprising protection devices e.g. overvoltage protection

Definition statement

This subgroup covers:

The subject matter under H01R 24/48 comprises cooperating parts for radio transmission having a center contact and a cylindrical contact concentrically disposed thereabout and means for reducing voltages above its upper design limit (e.g. transient voltages or voltage spikes)
Example: EP1780840

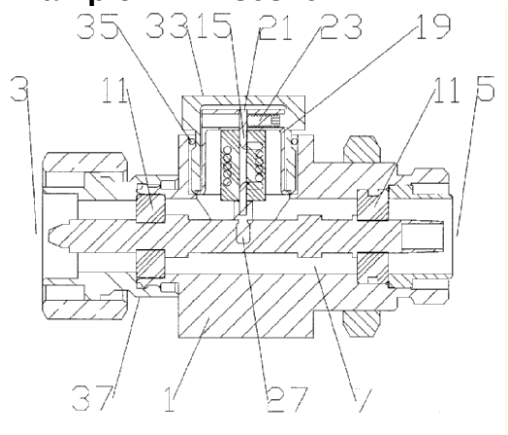

Title – H01R 24/50

mounted on a printed circuit board

Definition statement

This subgroup covers:

The subject matter under H01R 24/50 comprises cooperating parts for radio transmission having a center contact and a cylindrical contact concentrically disposed thereabout and adapted for mounting on a substrate providing electrically conductive paths
Example: US6140977

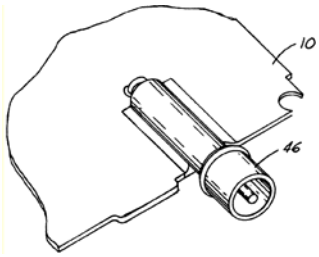

Title – H01R 24/52

mounted in or to a panel or structure

Definition statement

This subgroup covers:

The subject matter under H01R 24/52 comprises cooperating parts for radio transmission having a center contact and a cylindrical contact concentrically disposed thereabout and adapted for mounting on a support except a printed circuit board as in H01R 24/50
Example: US6679726

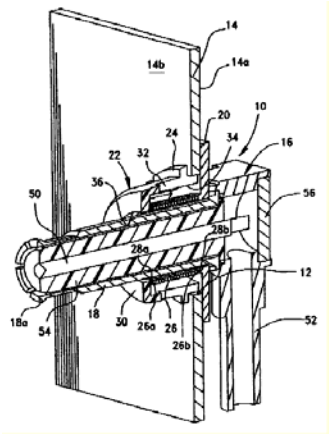

Title – H01R 24/54

Intermediate parts, e.g. adapters, splitters or elbows

Definition statement

This subgroup covers:

The subject matter under H01R 24/54 comprises cooperating parts for radio transmission having a center contact and a cylindrical contact concentrically disposed thereabout and specially adapted as coupling part between two or more counterparts, characterized by the relationship of the counterparts, e.g. different kind of counterparts, right angel relationship between counterparts, one counterpart connected to a plurality of counterparts
Example: US4687446

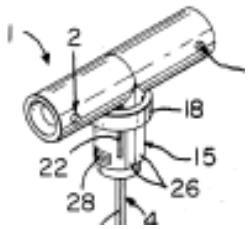

Title – H01R 24/56

specially adapted to a specific shape of the cable e.g. corrugated cable, twisted pair cable, cable with two screens or hollow cable

Definition statement

This subgroup covers:

The subject matter under H01R 24/56 comprises a plurality of cooperating parts for radio transmission having a center contact and a cylindrical contact concentrically disposed thereabout, being adapted to connect elongated conductors having a center conductor and shielding layer with special features
Example: US7189115

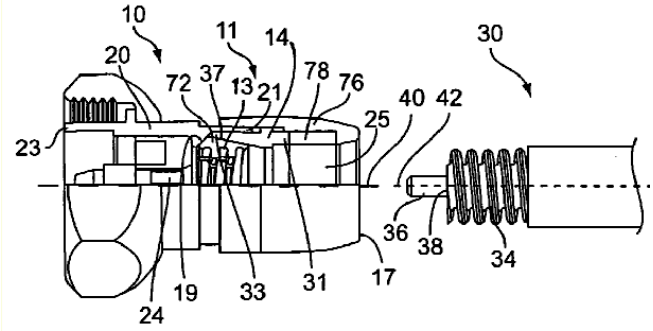

Title – H01R 24/58

Contacts spaced along longitudinal axis of engagement

Definition statement

This subgroup covers:

The subject matter under H01R 24/58 comprises coupling parts with contacts disposed serially along a line parallel to the longitudinal axis along which the coupling part engages its mating coupling part
Example: US2004198442

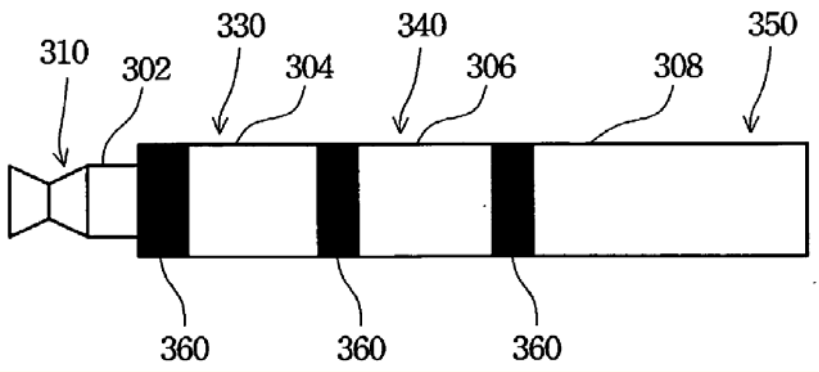

Title – H01R 24/60

Contacts spaced along planar side wall transverse to longitudinal axis of engagement

Definition statement

This subgroup covers:

The subject matter under H01R 24/60 comprises coupling parts with contacts disposed serially along a line orthogonal to the longitudinal axis along which the coupling part engages its mating coupling part
Example: US2007178734

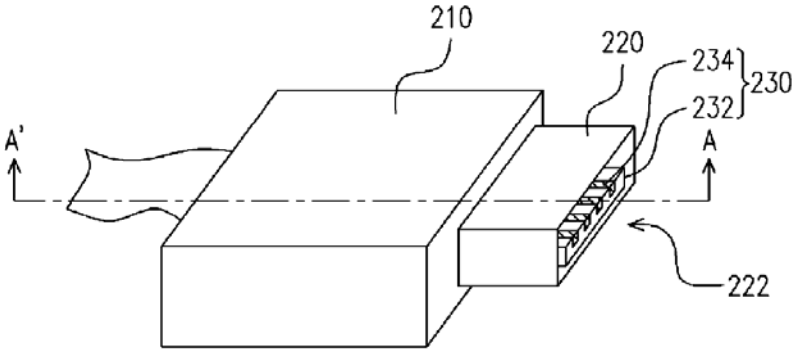

Title – H01R 24/62

Sliding engagements with one side only e.g. modular jack coupling devices

Definition statement

This subgroup covers:

The subject matter under H01R 24/62 comprises coupling parts with contacts disposed serially along a surface orthogonal to the longitudinal axis along which the coupling part engages its mating coupling part being accessible only on one side
Example: US3617982

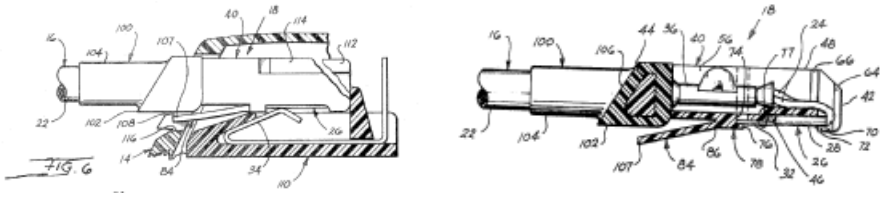

Title – H01R 24/64

for high frequency e.g. RJ 45

Definition statement

This subgroup covers:

The subject matter under H01R 24/58 comprises coupling parts with contacts disposed serially along a surface orthogonal to the longitudinal axis along which the coupling part engages its mating coupling part, the coupling part has special features for high speed transmissions
Example: US2005153580

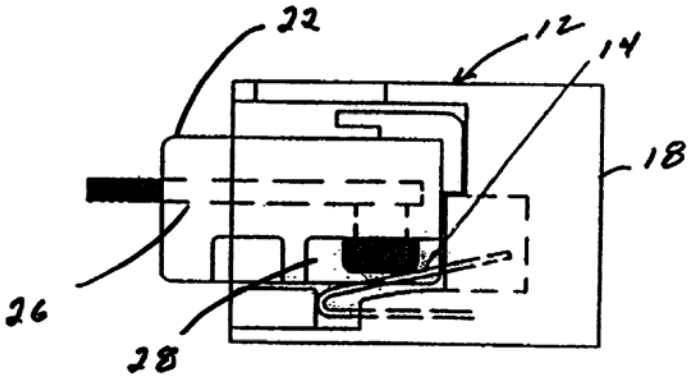

Title – H01R 24/66

with current-carrying pins, blades or analogous contacts and secured to apparatus or structure, e.g. to a wall

Definition statement

This subgroup covers:

The subject matter under H01R 24/66 comprises cooperating parts having protruding members with conducting properties extending from a support attached to a wall of an apparatus or structure
Example: US2007066111

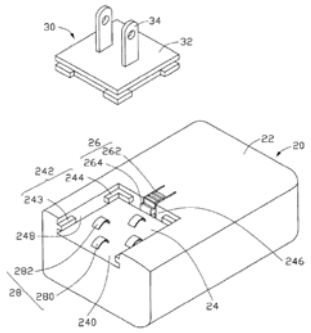

Title – H01R 24/68

with current-carrying pins, blades or analogous contacts and secured to apparatus or structure, e.g. to a wall

Definition statement

This subgroup covers:

The subject matter under H01R 24/68 comprises cooperating parts having protruding members with conducting properties extending from a portable device
Example: EP1178577

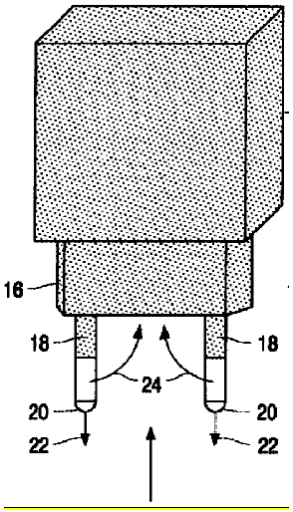

Title – H01R 24/70

with additional earth or shield contact

Definition statement

This subgroup covers:

The subject matter under H01R 24/70 comprises cooperating parts having protruding members with conducting properties extending from a support, one of the protrusions on the portable device having grounding means
Example: EP1383207

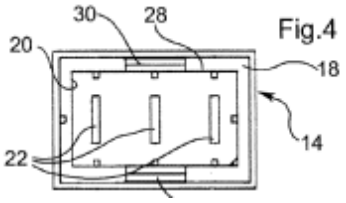

Fig.4

Fig.5

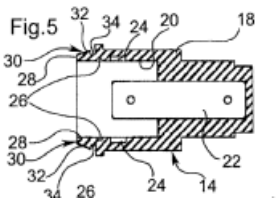

Title – H01R 24/76

with current-carrying sockets, clips or analogous contacts and secured to apparatus or structure, e.g. to a wall

Definition statement

This subgroup covers:

The subject matter under H01R 24/76 comprises cooperating parts having recesses with conducting properties extending into a support attached to a wall of an apparatus or structure
Example: US1994880

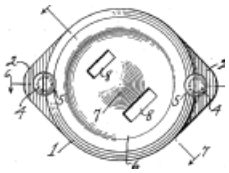

Title – H01R 24/78

with additional earth or shield contact

Definition statement

This subgroup covers:

The subject matter under H01R 24/78 comprises cooperating parts having recesses with conducting properties extending into a support attached to a wall of an apparatus or structure, one of the recesses having grounding means
Example: US6786766

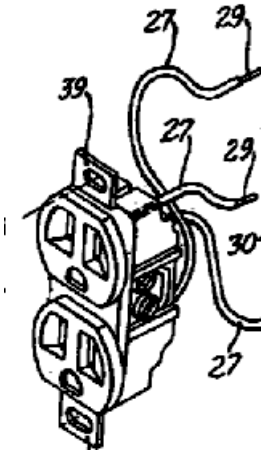

Title – H01R 24/84

Hermaphroditic coupling devices

Definition statement

This subgroup covers:

The subject matter under H01R 24/84 comprises cooperating parts which are identical in configuration in the interfitting portions thereof
Example: GB2436897

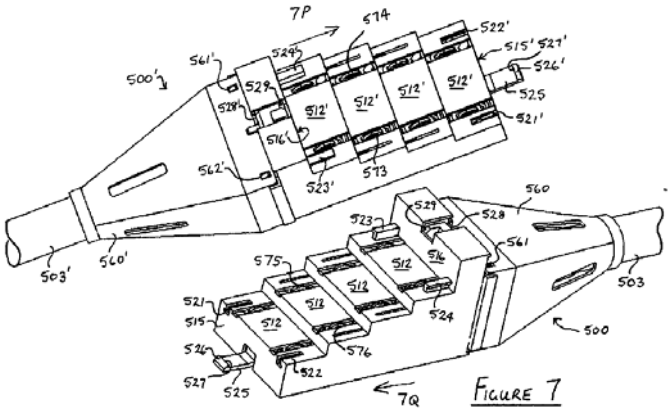

Title – H01R 24/86

Parallel contacts arranged about a common axis

Definition statement

This subgroup covers:

The subject matter under H01R 24/86 comprises cooperating parts with electrically mating conductors extending in the same direction about the longitudinal axis along which the cooperating part engages its mating coupling part
Example: US4960388

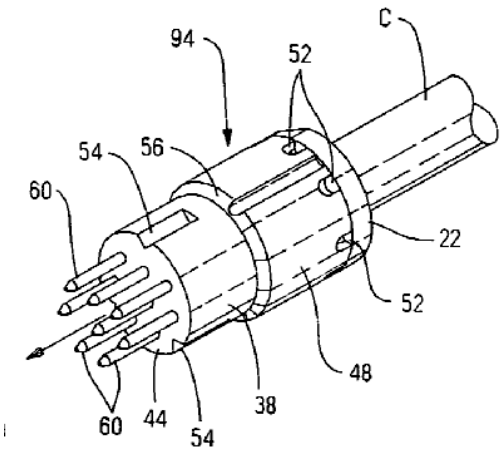

Swedish Patent and Registration Office

IPC Revision Project A022, subclass H01R **November 24, 2009**

Comments
(Relating to annexes 16, 17 and 19)

SE has a few comments relating to annexes 16 and 19.

Regarding annex 16, SE discovered that the reference to H01R 24/86 for H01R 24/10 does not comply with the scheme in annex 17. According to the scheme, in annex 17, the new place should be H01R 24/76 and not 24/86.

Another comment that relates to annex 16 is that the RCL provides for a range of groups to where the old groups are transferred while the scheme proposal in annex 17 only provides the one dot groups to where the old groups are transferred. SE believes that both annexes should contain the information which now only exists in the RCL.

SE also would like to point out a few things relating to the definition proposal, in annex 19.

First, it seams as the reference to H01R 12/00 in the scheme is missing in the definition under “this main group does not cover”.

Some of the titles for the groups in the definition do not fully comply with the scheme in annex 17.

1. H01R 24/22, 24/30, 24/70, 24/78 is missing an s at the end of the word “contact”.
2. The word “counter” in the title for H01R 24/20, annex 19, is not present in the title in the scheme, annex 17.
3. The words “coaxially-arranged” in the title for H01R 24/38, annex 19, are not written with a hyphen in the title in the scheme, annex 17.
4. The title for H01R 24/42 contains a comma, in annex 19, instead of the word “or”, as in the scheme of annex 17.
5. The title for H01R 24/44 is missing the word “means” in annex 19, according to the scheme in annex 17.
6. The word “current-carrying” in the title for H01R 24/66 and 24/76, annex 19, is not present in the title in the scheme, annex 17.
7. The title for H01R 24/68 is exactly the same as for 24/66, in annex 19, and does not comply with the title in the scheme in annex 17.
8. The titles for H01R 24/50 and 24/64 in annex 19 does not either fully comply with the titles in annex 19, but there is only one abbreviation and a comma missing.

Sofia Sjögren

DEUTSCHES PATENT- UND MARKENAMT German Patent and Trade Mark Office	Class/Subcl.: **H04R 24/00** Date:25.11.2009
DE - Comments — A 022	

Re: Annex 16, 17, 19, 20

DE supports the proposals in annex 16, 17 and 19 and concurs with the comments of SE in annex 20.

Besides, DE would like to point out the following:
a) The wording of the reference to H01R 13/648 under "this main group does not cover” isn't correct
b) There is a typing error for "right angle"in the definition of H01R 24/54 under "this subgroup covers"

Raluca Koch

IPC/A 023
ORIGINAL: English/French
DATE: 19.11.2009

WORLD INTELLECTUAL PROPERTY ORGANIZATION
ORGANISATION MONDIALE DE LA PROPRIÉTÉ INTELLECTUELLE

GENEVA/GENÈVE

COMMITTEE OF EXPERTS OF THE IPC UNION
COMITÉ D'EXPERTS DE L'UNION DE L'IPC

AL REVISION PROJECT FILE
DOSSIER DE PROJET RÉVISION NIVEAU ÉLEVÉ

PROPOSAL BY : **US** **PROPOSITION DE :**	**IPC AREA:** **G03F 1/00** **DOMAINE DE LA CIB :**
RAPPORTEUR : **US**	**TECHNICAL FIELD :** **E** **DOMAINE TECHNIQUE :**

ANNEX/ ANNEXE	CONTENT/CONTENU		ORIGIN/ ORIGINE	DATE
1	Decision of the subcommittee	Décision du cous-comité	IB	20.03.2009
2	Revision request with proposal	Demande de révision avec proposition	US	31.03.2009
3	Comments	Observations	EP	17.04.2009
4	Rapporteur report	Rapport du rapporteur	US	08.06.2009
5	Working Group decision	Décision du groupe de travail	IB	03.08.2009
6	French version	Version française	EP	14.08.2009
7	Proposal - scheme	Proposition - schéma	US	30.10.2009
8	Proposal - definitions	Proposition - définitions	US	30.10.2009
9	Comments	Observations	JP	16.11.2009
10	Comments	Observations	FR	16.11.2009

United States Patent and Trademark Office	
WIPO Revision Working Group	
Project: A023 **Photo-masks and screens (T036)**	**Date: June 8, 2009**

Rapporteur Report

During the recent T036 harmony project visit held May, 2009 in Tokyo, communications highlighted differing viewpoints between the opinions of JP, EP, and US representatives which resulted in a modified proposal. Consensus was achieved to modify the T036/A023 proposal for subgroups to be established under G03F 1/00 as follows:

	Type	Number	Indent level and titles
CL	**C**	**G03F 1/00**	**Originals for ~~the~~ photomechanical production of textured or patterned surfaces, e.g., masks, photo-masks, ~~masks or~~ reticles; Mask blanks or pellicles therefor; Containers specially adapted therefor; Preparation thereof**
CL	**N**	**Notes**	1. In this main group, the first place priority rule is applied, i.e. at each hierarchical level, classification is made in the first appropriate place.
AL	D	G03F 1/02	*transferred to 1/88*
AL	D	G03F 1/04	*transferred to 1/90*
AL	D	G03F 1/06	*transferred to 1/92*
AL	N	G03F 1/20	. Masks or mask blanks for imaging by charged particle beam [CPB] radiation, e.g. by electron beam; Preparation thereof
AL	N	G03F 1/22	. Masks or mask blanks for imaging by radiation of 100nm or shorter wavelength, e.g. X-ray masks, Extreme ultra-violet [EUV] masks; Preparation thereof
AL	N	G03F 1/24	. . Reflection masks; Preparation thereof
AL	N	G03F 1/26	. Phase shift masks [PSM's]; PSM blanks; Preparation thereof
AL	N	G03F 1/28	. . Three or more diverse phases on the same PSM; Preparation thereof
AL	N	G03F 1/29	. . Rim PSM or outrigger PSM; Preparation thereof
AL	N	G03F 1/30	. . Alternating PSM, e.g. Levenson-Shibuya PSM; Preparation thereof
AL	N	G03F 1/32	. . Attenuating PSM [att-PSM], e.g. ~~halftone~~ PSM ~~or masks~~ having semi-transparent phase shift portion~~s~~, halftone PSM; Preparation thereof

AL	N	G03F 1/34	. . Phase-edge PSM, e.g. chromeless PSM; Preparation thereof
AL	N	G03F 1/36	. Masks having ~~optical~~ proximity correction ~~[OPC]~~ features; Preparation thereof, e.g. optical proximity correction [OPC] design processes
AL	N	G03F 1/38	. Masks having auxiliary features, e.g. marks for alignment or ~~for~~ testing, special coatings; Preparation thereof
AL	N	G03F 1/40	. . Electrostatic discharge [ESD] features, e.g. ESD feature of conductive metal layer around periphery of the mask substrate
AL	N	G03F 1/42	. . Alignment or registration features, e.g. alignment marks on the mask substrate
AL	N	G03F 1/44	. . Testing or measuring features, e.g. focus monitors, sawtooth or notched scales, or grid patterns
AL	N	G03F 1/46	. . Antireflective coatings
AL	N	G03F 1/48	. . Protective coatings
AL	N	G03F 1/50	. Mask blanks; Preparation thereof
AL	N	G03F 1/52	. Reflectors
AL	N	G03F 1/54	. Absorbers, e.g. of opaque material
AL	N	G03F 1/56	. . Organic absorbers, e.g. of photo-resist~~s~~
AL	N	G03F 1/58	. . ~~with p~~Plural diverse absorber layers, e.g. stacked multilayer absorber~~s~~
AL	N	G03F 1/60	. Substrates
AL	N	G03F 1/62	. Pellicles, e.g. pellicle assemblies having membrane on support frame; Preparation thereof
AL	N	G03F 1/64	. . having special frames, e.g. structure or material, including bonding means therefor
AL	N	G03F 1/66	. Containers specially adapted for masks, mask blanks or pellicles; Preparation thereof
AL	N	G03F 1/68	. Preparation ~~methods~~processes
AL	N	G03F 1/70	. . Adaptating basic layout or design of mask to lithographic process requirement~~Layout or design processes~~, e.g., ~~with~~ second iteration correction of mask pattern for imaging
AL	N	G03F 1/72	. . Repair or correction of mask defects
AL	N	G03F 1/74	. . . by charged particle beam [CPB], e.g. focused ion beam repair or correction of defects
AL	N	G03F 1/76	. . Patterning of masks by imaging
AL	N	G03F 1/78	. . . by charged particle beam [CPB], e.g. electron beam patterning of masks
AL	N	G03F 1/80	. . Etching

Formatted Table

AL	N	G03F 1/82	. . Auxiliary processes, e.g. cleaning or inspecting
AL	N	G03F 1/84	. . . Inspecting
AL	N	G03F 1/86	. . . . by charged particle beam [CPB]
AL	N	G03F 1/88	. by photographic processes for production of originals simulating relief
AL	N	G03F 1/90	. by montage processes
AL	N	G034F 1/92	. from printing surfaces

EXCERPT FROM DOCUMENT IPC/WG/21/2
EXTRAIT DU DOCUMENT IPC/WG/21/2

REPORT ON THE SEVENTH SESSION OF THE IPC ADVANCED LEVEL SUBCOMMITTEE

17. Since the seventh session of the ALS was the final one, all pending A projects were included in the program of the Working Group. From now on, A projects will designate revision projects originating from the IP5 Offices and C projects will designate revision projects that would be included in the IPC revision program by the Committee. For practical reasons, the schemes adopted by the ALS in the framework of projects A 012, A 013, A 014, A 017, A 018 and A 020 were included in the Technical Annexes of this session (see Technical Annexes 1 to 7 and 9 to this report).

IPC REVISION PROGRAM

General

25. The Working Group noted the decision by the Committee of Experts at its forty-first session that revision projects, including advanced level revision projects, would be considered by the Working Group and forwarded to the Committee for final adoption after completion. It was noted that projects originating from the Trilateral or the IP5 Offices cooperation will be designated by the letter "A" and revision projects included in the IPC revision program by the Committee will be designated by the letter "C" (see paragraph 17, above).

26. Discussions were based on compilations of the relevant revision project files. The Working Group considered nine pending C projects, plus 17 A projects forwarded from the former ALS, and approved amendments relating to those projects (see Technical Annexes 1 to 29 to this report relating to revision projects). The status of those projects and the list of future actions and deadlines are indicated in Annex III to this report.

IPC Revision Projects

27. The Working Group made the following observations with respect to the IPC revision projects. All references to annexes in this paragraph refer to annexes of the corresponding project file, unless otherwise stated.

Project A 023 (electrical) – The Working Group agreed to invite further comments on the rapporteur report of Annex 4, to be followed by a new rapporteur proposal. The EPO was requested to prepare a French version based on Annex 4.

RAPPORT SUR LA SEPTIÈME SESSION DU SOUS-COMITÉ CHARGÉ DU NIVEAU ÉLEVÉ DE LA CIB

17. Étant donné que la septième session de l'ALS était la dernière, tous les projets A en instance ont été inscrits au programme du groupe du travail. Dorénavant, les projets A désigneront les projets de révision émanant des offices de l'IP5 et les projets C désigneront les projets de révision qui seront inscrits au programme de révision de la CIB par le comité. Pour des raisons pratiques, les schémas adoptés par l'ALS dans le cadre des projets A 012, A 013, A 014, A 017, A 018 et A 020 ont été inclus dans les annexes techniques du rapport sur la session en cours (voir les annexes techniques 1 à 7 et 9 du présent rapport).

PROGRAMME DE RÉVISION DE LA CIB

Généralités

25. Le groupe de travail a pris note de la décision prise par le comité d'experts à sa quarante et unième session selon laquelle les projets de révision, y compris ceux relatifs au niveau élevé, seront examinés par le groupe de travail et transmis au comité pour adoption définitive une fois achevés. Il a été pris note du fait que les projets émanant des offices de la coopération trilatérale ou de l'IP5 seraient désignés par la lettre "A" et que les projets de révision inscrits au programme de révision de la CIB par le comité seraient désignés par la lettre "C" (voir le paragraphe 17).

26. Les délibérations ont eu lieu sur la base de synthèses des dossiers de projet correspondants. Le groupe de travail a examiné neuf projets C en instance ainsi que 17 projets A transmis par l'ancien ALS et a approuvé les modifications relatives à ces projets (voir les annexes techniques 1 à 29 du présent rapport relatives aux projets de révision). L'état d'avancement de ces projets et la liste des mesures à prendre et des délais correspondants font l'objet de l'annexe III du présent rapport.

Projets de révision de la CIB

27. Le groupe de travail a formulé les observations ci-après concernant les projets de révision de la CIB. Dans le présent paragraphe, tout renvoi à des annexes désigne, sauf indication contraire, les annexes du dossier de projet correspondant.

Projet A 023 (électricité) – Le groupe de travail est convenu de demander des observations supplémentaires sur un rapport du rapporteur figurant à l'annexe 4, en vue de l'établissement d'une nouvelle proposition du rapporteur. L'OEB a été prié d'établir une version française fondée sur l'annexe 4.

Principal Directorate Patent Grant Automation - Directorate Classification		
Projet : **A023 (T036)**	Sujet: **Masques, photomasques ...**	CIB : **G03F 1/00**
Proposition de schéma		août 2009

La traduction suivante est basée sur l'annexe 4.

	G03F		
C	**1/00**	**Originals for photomechanical production of textured or patterned surfaces, e.g., masks, photo-masks, reticles; Mask blanks or pellicles therefor; Containers specially adapted therefor; Preparation thereof**	**Originaux pour la production par voie photomécanique de surfaces texturées, p.ex. masques, photomasques, réticules ; masques vierges ou pellicules à cet effet ; réceptacles spécialement adaptés ; Leur préparation**
N	Notes	1. In this group, the first place priority rule is applied, i.e. at each hierarchical level, classification is made in the first appropriate place.	1. Dans le présent groupe, la règle de la priorité à la première place s'applique, c. à d. qu'à chaque niveau hiérarchique, le classement s'effectue à la première place appropriée.
D	1/02	*transferred to 1/88*	*transféré en 1/88*
D	1/04	*transferred to 1/90*	*transféré en 1/90*
D	1/06	*transferred to 1/92*	*transféré en 1/92*
N	1/20	o Masks or mask blanks for imaging by charged particle beam [CPB] radiation, e.g. by electron beam; Preparation thereof	Masques ou masques vierges d'imagerie par rayonnement d'un faisceau de particules chargées [CPB charged particle beam], p.ex. par faisceau d'électrons ; Leur préparation
N	1/22	o Masks or mask blanks for imaging by radiation of 100nm or shorter wavelength, e.g. X-ray masks, extreme ultra-violet [EUV] masks; Preparation thereof	Masques ou masques vierges d'imagerie par rayonnement d'une longueur d'onde de 100 nm ou moins, p.ex. masques pour rayons X, masques en extrême ultra violet [EUV] ; Leur préparation
N	1/24	o o Reflection masks; Preparation thereof	Masques en réflexion ; Leur préparation
N	1/26	o Phase shift masks [PSM's]; PSM blanks; Preparation thereof	Masques à décalage de phase [PSM phase shift mask] ; Substrats pour PSM ; Leur préparation
N	1/28	o o Three or more diverse phases on the same PSM; Preparation thereof	Trois phases différentes ou plus sur le même PSM ; Leur préparation
N	1/29	o o Rim PSM or outrigger PSM; Preparation thereof	PSM à rebord ou PSM en surplomb; Leur préparation
N	1/30	o o Alternating PSM, e.g. Levenson-Shibuya PSM; Preparation thereof	PSM alternés, p.ex. PSM de Levenson-Shibuya ; Leur préparation
N	1/32	o o Attenuating PSM [att-PSM], e.g. PSM having semi-transparent phase shift portion, halftone PSM; Preparation thereof	PSM atténués [att-PSM], p.ex. PSM ayant une partie à décalage de phase semi-transparente, PSM en demi-ton ; Leur préparation

N	1/34	o o Phase-edge PSM, e.g. chromeless PSM; Preparation thereof	PSM à bord de phase, p.ex. PSM sans chrome ; Leur préparation
N	1/36	o Masks having proximity correction features; Preparation thereof, e.g. optical proximity correction [OPC] design processes	Masques à correction d'effets de proximité ; Leur préparation, p.ex. procédés de conception à correction d'effets de proximité [OPC optical proximity correction]
N	1/38	o Masks having auxiliary features, e.g. marks for alignment or testing, or special coatings; Preparation thereof	Masques à caractéristiques supplémentaires, p.ex. marquages pour l'alignement ou le contrôle, ou couches spéciales ; Leur préparation
N	1/40	o o Electrostatic discharge [ESD] features, e.g. ESD feature of conductive metal layer around periphery of the mask substrate	Aspects liés à la décharge électrostatique [ESD Electrostatic Discharge], p.ex. présence d'une couche métallique conductrice sur la périphérie du substrat du masque
N	1/42	o o Alignment or registration features, e.g. alignment marks on the mask substrate	Aspects liés à l'alignement ou au cadrage, p.ex. marquages d'alignement sur le substrat du masque
N	1/44	o o Testing or measuring features, e.g. focus monitors, sawtooth or notched scales, or grid patterns	Aspects liés au test ou à la mesure, p.ex. contrôleurs de focus, échelles en dents de scie ou à encoches, ou motifs de grilles
N	1/46	o o Antireflective coatings	Couches antiréfléchissantes
N	1/48	o o Protective coatings	Couches protectrices
N	1/50	o Mask blanks; Preparation thereof	Masques vierges ; Leur préparation
N	1/52	o Reflectors	Réflecteurs
N	1/54	o Absorbers, e.g. of opaque material	Absorbeurs, p.ex. en matériau opaque
N	1/56	o o Organic absorbers, e.g. of photo-resist	Absorbeurs organiques, p.ex. en photorésist
N	1/58	o o Plural diverse absorber layers, e.g. stacked multilayer absorber	Plusieurs couches diverses d'absorbeur, p.ex. absorbeur en empilement multicouche
N	1/60	o Substrates	Substrats
N	1/62	o Pellicles, e.g. pellicle assemblies having membrane on support frame; Preparation thereof	Pellicules, p.ex. assemblage de pellicule ayant une membrane sur un cadre de support ; Leur préparation
N	1/64	o o having special frames, e.g. structure or material, including bonding means therefor	ayant des cadres spéciaux, p.ex. de par leur structure ou matériau, y compris des moyens de liaison de ceux-ci
N	1/66	o Containers specially adapted for masks, mask blanks or pellicles; Preparation thereof	Réceptacles spécialement adaptés aux masques, masques vierges ou pellicules ; Leur préparation
N	1/68	o Preparation processes	Procédés de préparation
N	1/70	o o Adaptating basic layout or design of mask to lithographic process requirement, e.g., second iteration correction of mask pattern for imaging	Adaptation du tracé ou de la conception de base du masque aux exigences du procédé lithographique, p.ex. correction par deuxième itération d'un motif de masque pour l'imagerie
N	1/72	o o Repair or correction of mask	Réparation ou correction des défauts dans un

		defects	masque
N	1/74	o o o by charged particle beam [CPB], e.g. focused ion beam repair or correction of defects	par un faisceau de particules chargées [CPB charged particle beam], p.ex. réparation ou correction de défauts par un faisceau d'ions focalisé
N	1/76	o o Patterning of masks by imaging	Création des motifs d'un masque par imagerie
N	1/78	o o o by charged particle beam [CPB], e.g. electron beam patterning of masks	par un faisceau de particules chargées [CPB charged particle beam], p.ex. création des motifs d'un masque par un faisceau d'électrons
N	1/80	o o Etching	Attaque chimique
N	1/82	o o Auxiliary processes, e.g. cleaning or inspecting	Procédés auxiliaires, p.ex. nettoyage ou inspection
N	1/84	o o o Inspecting	Inspection
N	1/86	o o o o by charged particle beam [CPB]	au moyen d'un faisceau de particules chargées [CPB charged particle beam]
N	1/88	o by photographic processes for production of originals simulating relief	par procédés photographiques pour la production d'originaux simulant le relief
N	1/90	o by montage processes	par procédés de montage
N	1/92	o from printing surfaces	à partir de surfaces d'impression

United States Patent and Trademark Office	
WIPO Revision Working Group	
Project: A023 **Photo-masks and screens (T036)**	**Date: October 30, 2009**

Rapporteur Proposal

The below scheme is the ”cleaned” version (following incorporation of tracked changes) of the A023 classification scheme shown in Annex 4 of the instant project file, which has been posted together with Annex 8 representing the proposed A023 classification definitions.

	Type	Number	Indent level and titles
CL	**C**	**G03F 1/00**	**Originals for photomechanical production of textured or patterned surfaces, e.g., masks, photo-masks, reticles; Mask blanks or pellicles therefor; Containers specially adapted therefor; Preparation thereof**
CL	**N**	**Notes**	1. In this main group, the first place priority rule is applied, i.e. at each hierarchical level, classification is made in the first appropriate place.
AL	D	G03F 1/02	*transferred to 1/88*
AL	D	G03F 1/04	*transferred to 1/90*
AL	D	G03F 1/06	*transferred to 1/92*
AL	N	G03F 1/20	. Masks or mask blanks for imaging by charged particle beam [CPB] radiation, e.g. by electron beam; Preparation thereof
AL	N	G03F 1/22	. Masks or mask blanks for imaging by radiation of 100nm or shorter wavelength, e.g. X-ray masks, extreme ultra-violet [EUV] masks; Preparation thereof
AL	N	G03F 1/24	. . Reflection masks; Preparation thereof
AL	N	G03F 1/26	. Phase shift masks [PSM’s]; PSM blanks; Preparation thereof
AL	N	G03F 1/28	. . Three or more diverse phases on the same PSM; Preparation thereof
AL	N	G03F 1/29	. . Rim PSM or outrigger PSM; Preparation thereof
AL	N	G03F 1/30	. . Alternating PSM, e.g. Levenson-Shibuya PSM; Preparation thereof
AL	N	G03F 1/32	. . Attenuating PSM [att-PSM], e.g. PSM having semi-transparent phase shift portion, halftone PSM; Preparation

			thereof
AL	N	G03F 1/34	. . Phase-edge PSM, e.g. chromeless PSM; Preparation thereof
AL	N	G03F 1/36	. Masks having proximity correction features; Preparation thereof, e.g. optical proximity correction [OPC] design processes
AL	N	G03F 1/38	. Masks having auxiliary features, e.g. marks for alignment or testing, special coatings; Preparation thereof
AL	N	G03F 1/40	. . Electrostatic discharge [ESD] features, e.g. ESD feature of conductive metal layer around periphery of the mask substrate
AL	N	G03F 1/42	. . Alignment or registration features, e.g. alignment marks on the mask substrate
AL	N	G03F 1/44	. . Testing or measuring features, e.g. focus monitors, sawtooth or notched scales, or grid patterns
AL	N	G03F 1/46	. . Antireflective coatings
AL	N	G03F 1/48	. . Protective coatings
AL	N	G03F 1/50	. Mask blanks; Preparation thereof
AL	N	G03F 1/52	. Reflectors
AL	N	G03F 1/54	. Absorbers, e.g. of opaque material
AL	N	G03F 1/56	. . Organic absorbers, e.g. of photo-resist
AL	N	G03F 1/58	. . Plural diverse absorber layers, e.g. stacked multilayer absorber
AL	N	G03F 1/60	. Substrates
AL	N	G03F 1/62	. Pellicles, e.g. pellicle assemblies having membrane on support frame; Preparation thereof
AL	N	G03F 1/64	. . having special frames, e.g. structure or material, including bonding means therefor
AL	N	G03F 1/66	. Containers specially adapted for masks, mask blanks or pellicles; Preparation thereof
AL	N	G03F 1/68	. Preparation processes
AL	N	G03F 1/70	. . Adapting basic layout or design of mask to lithographic process requirement, e.g., second iteration correction of mask pattern for imaging
AL	N	G03F 1/72	. . Repair or correction of mask defects
AL	N	G03F 1/74	. . . by charged particle beam [CPB], e.g. focused ion beam repair or correction of defects
AL	N	G03F 1/76	. . Patterning of masks by imaging
AL	N	G03F 1/78	. . . by charged particle beam [CPB], e.g. electron beam patterning of masks

AL	N	G03F 1/80	. . Etching
AL	N	G03F 1/82	. . Auxiliary processes, e.g. cleaning or inspecting
AL	N	G03F 1/84	. . . Inspecting
AL	N	G03F 1/86	. . . . by charged particle beam [CPB]
AL	N	G03F 1/88	. by photographic processes for production of originals simulating relief
AL	N	G03F 1/90	. by montage processes
AL	N	G03F 1/92	. from printing surfaces

United States Patent and Trademark Office	
WIPO Revision Working Group	
Project: A023 **Photo-masks and screens (T036)**	**Date: October 30, 2009**

Title – G03F 1/00

Originals for photomechanical production of textured or patterned surfaces, e.g., masks, photo-masks, reticles; Mask blanks or pellicles therefor; Containers specially adapted therefor; Preparation thereof

Definition statement

This group covers:

Patterned radiation modifying products that are chemically defined and have been patterned to modify radiation during imaging (e.g., masks, photomasks, reticles), preparation of such patterned radiation modifying products, similar or like products that function as mask blanks or specialized substrates, per se, for preparing such patterned radiation modifying products, processes of preparing such mask blanks or specialized substrates, per se (when not provided for elsewhere), pellicles, per se or pellicles in combination with patterned radiation modifying products, processes of preparing such pellicles (when not provided for elsewhere), containers that are specially adapted therefor, or processes of preparing the same (when not provided for elsewhere).

Relationship between large subject matter areas

References relevant to classification in this group

This group does not cover:

Electrography; electrophotography	G03G
Photomechanical process; apparatus; photosensitive material, e.g., photoresist, in general	G03F 7/00
Use of photoresist structures for special production processes, e.g.: • Producing decorative effects • Manufacture or treatment of semiconductor or solid state devices or parts thereof	 B44C H01L 21/00
Printed circuits; details of electric apparatus; manufacture of electrical components, in general	H05K

Examples of places where the subject matter of this class is covered when specially adapted, used for a particular purpose, or incorporated in a larger system:

Informative references

Attention is drawn to the following places, which may be of interest for search:

Holographic processes or apparatus	G03H

Special rules of classification within this group

In this main group, at each hierarchical level, in the absence of an indication to the contrary, classification is made in the first appropriate place.

Glossary of terms

In this main group the following terms or expressions are used with the meaning indicated:

Title – G03F 1/20

Masks or mask blanks for imaging by charged particle beam (CPB) radiation, e.g., by electron beam; Preparation thereof

Definition statement

This subgroup covers:

Subject matter of main group G03F 1/00 in which the radiation modifying products are either patterned masks for imaging by charged particle beam (CPB) radiation (e.g., by electron beam), mask blanks therefor, or specialized substrates for preparing such patterned masks; and the processes of preparing are directed to preparation of such patterned masks for imaging by charged particle beam (CPB) radiation, preparation of mask blanks therefor, or preparation of specialized substrates therefor.

Title – G03F 1/22

Masks or mask blanks for imaging by radiation of 100nm or shorter wavelength, e.g., X-ray masks, Extreme ultraviolet (EUV) masks; Preparation thereof

Definition statement

This subgroup covers:

Subject matter of main group G03F 1/00 in which the radiation modifying products are either patterned masks for imaging by radiation of 100 nanometers or shorter wavelength (e.g., X-ray masks, extreme ultraviolet (EUV) masks), mask blanks therefor, or specialized substrates for preparing such patterned masks; and the processes of preparing are directed to preparation of such patterned masks for imaging by radiation of 100 nanometers or shorter wavelength (e.g., X-ray masks, extreme ultraviolet (EUV) masks), preparation of mask blanks therefor, or preparation of specialized substrates therefor.

Title – G03F 1/26

Phase shift masks (PSM's); PSM blanks therefor; Preparation thereof

Definition statement

This subgroup covers:

Subject matter of main group G03F 1/00 in which the radiation modifying products are either patterned phase shift masks (PSM's), PSM blanks therefor, or specialized substrates for preparing such patterned PSM's; and the processes of preparing are directed to preparation of such patterned PSM's, preparation of PSM blanks therefor, or preparation of specialized substrates therefor.

> **(1) Note. In this subgroup, the phase shift mask (PSM) has a phase shift (PS) transmissive or reflective region that provides a different effective optical path length for illumination exiting the PS region than that of another (usually adjacent non-PS) region, so that exiting illumination from these separate regions are at different phases from each other. When the phase difference between adjacent PS and non-PS regions is 180 degrees, destructive interference is maximized for the exiting illumination between these regions, causing minimum combined diffracted light intensity, which results in a darkened projected light intensity that improves resolution when exposing a photosensitive layer (such as a photoresist).**
>
> **(2) Note. For a transmissive PSM, the phase shift (PS) region is usually produced by selective addition of a transparent PS layer that increases the effective thickness of a transmissive substrate or by selective etching to create a recess that decreases the thickness of the transmissive substrate, each of which provides exiting illumination that differs in phase from illumination exiting another unchanged region of the transmissive substrate. However, the difference in phase at the phase shifting region can also be produced by selective doping or implantation of particular ions into the transmissive substrate to selectively change the refractive index or other optical characteristic of the transparent substrate, altering the passage of illuminated light exiting from the phase shifting region relative to light exiting from another (non-PS) region of the transmissive substrate for the PSM.**

Title – G03F 1/28

Three or more diverse phases from the same PSM; Preparation thereof

Definition statement

This subgroup covers:

Subject matter of subgroup G03F 1/26 in which the phase shift mask (PSM) has three (3) or more different transmissive or reflective portions thereon that provide three (3) or more diverse phases of exiting illumination (e.g., tri-tone PSM for 0°, 90°, and 180° phases); and in which the process of preparing is directed to preparation of such a patterned PSM.

Title – G03F 1/29

Rim PSM or outrigger PSM; Preparation thereof

Definition statement

This subgroup covers:

Subject matter of subgroup G03F 1/26 in which the phase shift mask (PSM) has an absorber region with an adjacent clear narrow ridge that produces phase shifted exiting illumination (180 degrees out of phase) with respect to non-phase shifted illumination exiting a non-phase shifted clear region of a transparent substrate, where the absorber region represents a pattern to be reproduced (rim PSM or outrigger PSM); and in which the process of preparing is directed to preparation of such a rim PSM or an outrigger PSM.

Title – G03F 1/30

Alternating PSM, e.g. Levenson-Shibuya PSM; Preparation thereof

Definition statement

This subgroup covers:

Subject matter of subgroup G03F 1/26 in which the phase shift mask (PSM) has alternating diverse phase clear regions separated by an absorber region that represents a pattern to be reproduced, where the absorber region is usually in the form of absorber lines separated by alternating phase shift (PS) spaces and non-phase shift (non-PS) spaces in repeating sequence across a major surface of the PSM (e.g., Levenson-Shibuya PSM, etc.); and in which the process of preparing is directed to preparation of such an alternating PSM (alt-PSM).

Title – G03F 1/32

Attenuating phase shift mask (att-PSM), e.g., PSM having semi-transparent phase shift portion, halftone PSM; Preparation thereof

Definition statement

This subgroup covers:

Subject matter of subgroup G03F 1/26 in which the phase shift mask (PSM) has an attenuating region that produces phase shifted exiting illumination at a different phase from that produced by a non-attenuating clear region of the attenuating PSM (e.g., PSM having semi-transparent phase shift portion, halftone PSM); and in which the process of preparing is directed to preparation of such an attenuating PSM (att-PSM).

> **(1) Note. In this attenuating PSM (att-PSM, halftone PSM), the attenuating or halftone region is partially transmissive and provides a phase shift (PS) in exiting illumination. The degree of PS and the transmissiveness of the att-PS region depends on the material and thickness of the att-PS region, as well as depending on the wavelength of the illumination. Such an att-PS region or a halftone PS region can be formed by adding an appropriate material at a suitable thickness, reducing the thickness of a previously formed layer (whether a supporting substrate of the att-PSM or an additional layer thereon), or other post-treatment of an att-PSM portion (such as selective doping or ion implantation).**
>
> **(2) Note. An att-PS region can be created by sufficiently reducing the thickness of a normally opaque absorber layer material, such as a thin layer of chromium (Cr) often called "leaky chrome".**

Title – G03F 1/34

Phase-edge PSM, e.g. chromeless PSM; Preparation thereof

Definition statement

This subgroup covers:

Subject matter of subgroup G03F 1/26 in which the phase shift mask (PSM) has at least two clear regions directly adjacent to each other that produce different phases (usually 180 degrees apart) to create a phase edge between these diverse clear regions in corresponding portions of exiting illumination, where the phase edge represents a pattern to be reproduced (e.g., chromeless PSM, etc.); and in which the process of preparing is directed to preparation of such a phase edge PSM.

> **Note. In this subgroup, such a phase edge PSM can be without any opaque region (as a chromeless PSM). Alternatively, the phase edge PSM is permitted to include an opaque region or an absorber region, such as at the peripheral border of this phase edge PSM to avoid unwanted artifacts that might otherwise be produced in a common photoresist layer by step-and-repeat exposures from this phase edge PSM. However, this phase edge PSM must still have at least one unobstructed phase edge between two directly adjacent clear regions that produce exiting illumination having different phases (e.g., at 0° and 180°, etc.), where the phase edge represents a pattern to be reproduced, as described above.**

Title – G03F 1/36

Masks having proximity correction features; Preparation thereof, e.g. optical proximity correction [OPC] design processes

Definition statement

This subgroup covers:

Subject matter of main group G03F 1/00 in which the patterned radiation modifying products are masks, where the mask has a pattern that includes a proximity correction feature or a changed dimension of a printing feature for improving a resulting printed pattern formed thereby (e.g., enhancing sub-resolution sized patterns, reducing side-lobe formation between closely spaced patterns); and in which the processes of preparing are directed to preparation of such masks having proximity correction features (e.g., optical proximity correction [OPC] design processes).

> **(1) Note. Proximity correction addresses problems resulting from the miniaturization of patterns for radiation modifying masks, which typically results in degradation of the pattern, with the degradation not being uniform between sorts of pattern such as, for example, a line-and-space pattern, an isolated pattern, etc.**
> **(2) Note. The proximity correction features can be sub-resolution patterns (e.g. serifs, assist bars) or modified patterns (e.g. biased) to compensate for optical proximity effects in a basic layout of a mask pattern. Alternatively, the proximity correction features can be dummy patterns, which are placed in a vacant region of a mask pattern to reduce inhomogeneous processing due to proximity effects.**

References relevant to classification in this group

This subgroup does not cover:

Adapting basic layout or design of a mask to a lithographic process requirement for preparation of masks without proximity correction features	G03F 1/70
Computer-aided design in general	G06F 17/50

Title – G03F 1/38

Masks having auxiliary features, e.g., marks for alignment or testing, special coatings; Preparation thereof

Definition statement

This subgroup covers:

Subject matter of main group G03F 1/00 in which the patterned radiation modifying products are masks having auxiliary features, where the mask possesses some structure in addition to that used for imaging and this structure is used for subsidiary purposes; and in which the processes of preparing are directed to preparation of such masks having auxiliary features.

Note. For example, the subsidiary purposes may be for alignment of the mask within an exposure apparatus, for testing of the mask, for protecting the mask, or for improving an image obtained from the mask.

Title – G03F 1/50

Mask blanks; Preparation thereof

Definition statement

This subgroup covers:

Subject matter of main group G03F 1/00 in which the radiation modifying products are mask blanks for producing patterned masks; and in which the processes of preparing are directed to preparation of such mask blanks.

Title – G03F 1/52

Reflectors

Definition statement

This subgroup covers:

Subject matter of main group G03F 1/00 in which the radiation modifying products have a reflector that functions as a mirror to deflect incident radiation.

Note. The reflector can be a particular material that is chemically defined. Alternatively, the specified reflector can have a specific shape, a particular thickness, or a given internal microstructure (such as a reflector that was subjected to a particular heat treatment to relieve internal stress).

Title – G03F 1/54

Absorbers, e.g. of opaque material

Definition statement

This subgroup covers:

Subject matter of main group G03F 1/00 in which the radiation modifying products have an absorber (e.g., of opaque material) which functions to absorb incident radiation.

(1) Note. The absorber can be a particular opaque material that is chemically defined (e.g., tantalum (Ta), gold (Au), chromium (Cr), carbon (C), molybdenum silicide (MoSi)). Alternatively, the absorber can have a specific pattern (e.g., an unresolvable grid pattern leading to a grey tone mask, a gradient mask), a particular thickness (e.g., making the absorber region semi-transparent to provide only 20% transmittance for incident radiation at a target wavelength for imaging), or a given internal structure (e.g., multilayer absorber, ion implanted opaque layer to change an optical property for absorbing more incident radiation).

(2) Note. Excluded from this subgroup are attenuating phase shift masks (PSMs) having PS regions created by sufficiently reducing the thickness of a normally opaque absorber layer material, such as a thin layer of chromium (Cr) often called "leaky chrome".

Title – G03F 1/60

Substrates

Definition statement

This subgroup covers:

Subject matter of main group G03F 1/00 in which the radiation modifying products or similar products have a substrate defined by a particular material, a given structure, or a stated property, making the substrate especially suited (e.g., in a patterned mask, in a mask blank therefor) for use in radiation imaging.

Informative References

Attention is drawn to the following places, which may be of interest for search:

Layered products characterized by the non-homogeneity or physical structure of a layer	B32B 5/00

Title – G03F 1/62

Pellicles, e.g. pellicle assembly having membrane on support frame; Preparation thereof

Definition statement

This subgroup covers:

Subject matter of main group G03F 1/00 in which the pellicles, per se, or the pellicles in combination with radiation modifying products, provide protection for a patterned mask by excluding foreign matter (e.g., solid particles of dust) that would otherwise

degrade proper imaging from the patterned mask (e.g., pellicle assembly having membrane on support frame).

> **Note. In this subgroup, the pellicle often includes a thin transparent layer (such as a transparent flexible membrane) attached to a rigid frame to hold the thin transparent layer at a specified distance away from the mask pattern so that foreign matter collecting on the outside of the pellicle will not be in the range of focus during imaging, in order to avoid degradation of the resulting imaged pattern produced from the mask. Alternatively, the pellicle can be a hard self-supporting layer, having a specified thickness and transparency, that is formed on the patterned mask. In either case, the pellicle still protects the mask, to which the pellicle is attached, from dust adhering on the mask pattern that would otherwise occur during imaging of the mask without any benefit of the pellicle.**

Title – G03F 1/64

having special frames, e.g. structure or material, including bonding means therefor

Definition statement

This subgroup covers:

Subject matter of subgroup G03F 1/62 in which the pellicles have special frames (e.g. structure or material), including bonding means for the pellicle frame, which establishes a bond between the frame and a pellicle membrane or between a frame and a substrate of a radiation modifying product.

> **Note. In this subgroup, the bonding means often includes an adhesive layer. Alternatively, the bonding means can include a structure that provides a physical attachment.**

Title – G03F 1/66

Containers specially adapted for masks, mask blanks, or pellicles; Preparation thereof

Definition statement

This subgroup covers:

Subject matter of main group G03F 1/00 in which the containers are specially adapted for holding, protecting, or transporting of masks, mask blanks, or pellicles as defined therein; and the processes of preparing such containers (when not provided for elsewhere).

Title – G03F 1/68

Preparation processes

Definition statement

This subgroup covers:

Subject matter of main group G03F 1/00 in which the preparation processes for preparing radiation modifying products and similar or like products include particular preparation steps, specific manufacturing methods, or given design steps for preparing these products, but which preparation processes are not specifically provided for in the previous subgroups.

Title – G03F 1/70

Adapting basic layout or design of mask to lithographic process requirement, e.g. second iteration correction of mask pattern for imaging

Definition statement

This subgroup covers:

Subject matter of subgroup G03F 1/68 in which the preparation processes are for adapting basic layout of patterned radiation modifying products to a lithographic process requirement, which include methods for adapting, modifying or correcting of basic patterns for a radiation mask used for photomechanical production of textured or patterned surfaces (e.g. second iteration correction of mask pattern for imaging).

References relevant to classification in this group

This subgroup does not cover:

Proximity correction layout or design processes for preparation of masks with proximity correction features, e.g. OPC features	G03F 1/36
Computer-aided design in general	G06F 17/50

Title – G03F 1/72

Repair or correction of mask defects

Definition statement

This subgroup covers:

Subject matter of subgroup G03F 1/68 in which the preparation processes for preparing patterned radiation modifying products include methods for repair or correction of mask defects. e.g., by removing excess part defects or filling in missing part defects.

Title – G03F 1/76

Patterning of masks by imaging

Definition statement

This subgroup covers:

Subject matter of subgroup G03F 1/68 in which the processes for preparing patterned radiation modifying products include patterning of masks by imaging.

> **Note. Typically, this imaging to pattern the mask is accomplished by selectively exposing and developing a photosensitive layer (e.g., a photoresist layer on a mask blank) for defining a pattern therein that is used to form the resulting patterned mask.**

Title – G03F 1/80

Etching

Definition statement

This subgroup covers:

Subject matter of subgroup G03F 1/68 in which the processes for preparing patterned radiation modifying products include an etching step to selectively remove material from a mask or a mask blank.

Informative References

Attention is drawn to the following places, which may be of interest for search:

Etching metallic material by chemical means	C23F 1/00

Title – G03F 1/82

Auxiliary processes, e.g. cleaning or inspecting

Definition statement

This subgroup covers:

Subject matter of subgroup G03F 1/68 in which the processes for preparing radiation modifying products and similar or like products include performing operations that are ancillary to the manufacture or the design methods for these products, but which ancillary operations (as auxiliary processes) are not specifically provided for in the previous subgroups (e.g. cleaning or inspecting).

References relevant to classification in this group

This subgroup does not cover:

Cleaning in general	B08B
Testing of optical apparatus	G01M 11/00
Methods or arrangements for reading or recognizing printed or written characters or for recognizing patterns	G06K 9/00

JAPAN PATENT OFFICE November 16, 2009

Project: A023 Subclass: G03F

Comment

JP thanks US Rapporteur for the posting of proposals of scheme and definitions (Annexes 7 and 8). JP fully supports the scheme in Annex 7.

As concerns the definitions in Annex 8, however, JP would not wish to participate in the discussion at the coming IPC/RWG22. JP has placed a few questions about definitions to US Rapporteur in the Trilateral Project of T036 as Annex 48. After the receipt of response thereto, JP would like to thoroughly consider the matter of definitions. It will also need time for the internal discussion with examiners in charge of classification places of the *limiting references* listed in the definitions.

[END]

Commentaire FR sur le traduction EP		
Projet : **A023 (T036)**	Sujet: **Masques, photomasques ...**	CIB : **G03F 1/00**
Proposition de schéma		novembre 2009

La traduction suivante est basée sur l'annexe 4.

	G03F		
C	**1/00**	**Originals for photomechanical production of textured or patterned surfaces, e.g., masks, photo-masks, reticles; Mask blanks or pellicles therefor; Containers specially adapted therefor; Preparation thereof**	**Originaux pour la production par voie photomécanique de surfaces texturées, p.ex. masques, photomasques, réticules ; masques vierges ou pellicules à cet effet ; ~~réceptacles~~ Réceptacles spécialement adaptés à ces originaux ; Leur préparation**
N	Notes	1. In this group, the first place priority rule is applied, i.e. at each hierarchical level, classification is made in the first appropriate place.	1. Dans le présent groupe, la règle de la priorité à la première place s'applique, c. à d. qu'à chaque niveau hiérarchique, le classement s'effectue à la première place appropriée.
D	1/02	*transferred to 1/88*	*transféré en 1/88*
D	1/04	*transferred to 1/90*	*transféré en 1/90*
D	1/06	*transferred to 1/92*	*transféré en 1/92*
N	1/20	o Masks or mask blanks for imaging by charged particle beam [CPB] radiation, e.g. by electron beam; Preparation thereof	Masques ou masques vierges d'imagerie par rayonnement d'un faisceau de particules chargées [CPB charged particle beam], p.ex. par faisceau d'électrons ; Leur préparation
N	1/22	o Masks or mask blanks for imaging by radiation of 100nm or shorter wavelength, e.g. X-ray masks, extreme ultra-violet [EUV] masks; Preparation thereof	Masques ou masques vierges d'imagerie par rayonnement d'une longueur d'onde de 100 nm ou moins, p.ex. masques pour rayons X, masques en extrême ultra violet [EUV] ; Leur préparation
N	1/24	o o Reflection masks; Preparation thereof	Masques en réflexion ; Leur préparation
N	1/26	o Phase shift masks [PSM's]; PSM blanks; Preparation thereof	Masques à décalage de phase [PSM phase shift mask] ; Substrats pour PSM ; Leur préparation
N	1/28	o o Three or more diverse phases on the same PSM; Preparation thereof	~~Trois~~ avec trois phases différentes ou plus sur le même PSM ; Leur préparation
N	1/29	o o Rim PSM or outrigger PSM; Preparation thereof	PSM à rebord ou PSM en surplomb; Leur préparation
N	1/30	o o Alternating PSM, e.g. Levenson-Shibuya PSM; Preparation thereof	PSM alternés, p.ex. PSM de Levenson-Shibuya ; Leur préparation
N	1/32	o o Attenuating PSM [att-PSM], e.g. PSM having semi-transparent phase shift portion, halftone PSM; Preparation thereof	PSM atténués [att-PSM], p.ex. PSM ayant une partie à décalage de phase semi-transparente, PSM en demi-ton ; Leur préparation
N	1/34	o o Phase-edge PSM, e.g.	PSM à bord de phase, p.ex. PSM sans

		chromeless PSM; Preparation thereof	chrome ; Leur préparation
N	1/36	o Masks having proximity correction features; Preparation thereof, e.g. optical proximity correction [OPC] design processes	Masques à correction d'effets de proximité ; Leur préparation, p.ex. procédés de conception à correction d'effets de proximité [OPC optical proximity correction]
N	1/38	o Masks having auxiliary features, e.g. marks for alignment or testing, or special coatings; Preparation thereof	Masques à caractéristiques supplémentaires, p.ex. marquages pour l'alignement ou les ~~contrôle~~tests, ou couches ~~spéciales~~ particulières ; Leur préparation
N	1/40	o o Electrostatic discharge [ESD] features, e.g. ESD feature of conductive metal layer around periphery of the mask substrate	Aspects liés à la décharge électrostatique [ESD Electrostatic Discharge], p.ex. présence d'une couche métallique conductrice sur la périphérie du substrat du masque
N	1/42	o o Alignment or registration features, e.g. alignment marks on the mask substrate	Aspects liés à l'alignement ou au cadrage, p.ex. marquages d'alignement sur le substrat du masque
N	1/44	o o Testing or measuring features, e.g. focus monitors, sawtooth or notched scales, or grid patterns	Aspects liés au test ou à la mesure, p.ex. contrôleurs de focus, échelles en dents de scie ou à encoches, ou motifs de grilles
N	1/46	o o Antireflective coatings	Couches antiréfléchissantes
N	1/48	o o Protective coatings	Couches protectrices
N	1/50	o Mask blanks; Preparation thereof	Masques vierges ; Leur préparation
N	1/52	o Reflectors	Réflecteurs
N	1/54	o Absorbers, e.g. of opaque material	Absorbeurs, p.ex. en matériau opaque
N	1/56	o o Organic absorbers, e.g. of photo-resist	Absorbeurs organiques, p.ex. en photorésist
N	1/58	o o Plural diverse absorber layers, e.g. stacked multilayer absorber	~~Plusieurs~~ avec plusieurs couches diverses d'absorbeur, p.ex. absorbeurs en empilement multicouche
N	1/60	o Substrates	Substrats
N	1/62	o Pellicles, e.g. pellicle assemblies having membrane on support frame; Preparation thereof	Pellicules, p.ex. assemblage de pellicules ayant une membrane sur un cadre de support ; Leur préparation
N	1/64	o o having special frames, e.g. structure or material, including bonding means therefor	ayant des cadres ~~spéciaux~~particuliers, p.ex. ~~de par~~du point de vue de leur structure ou de leur matériau, y compris des moyens de liaison de ceux-ci
N	1/66	o Containers specially adapted for masks, mask blanks or pellicles; Preparation thereof	Réceptacles spécialement adaptés aux masques, aux masques vierges ou aux pellicules ; Leur préparation
N	1/68	o Preparation processes	Procédés de préparation
N	1/70	o o Adaptating basic layout or design of mask to lithographic process requirement, e.g., second iteration correction of mask pattern for imaging	Adaptation du tracé ou de la conception de base du masque aux exigences du procédé lithographique, p.ex. correction par deuxième itération d'un motif de masque pour l'imagerie

N	1/72	o o Repair or correction of mask defects	Réparation ou correction des défauts dans un masque
N	1/74	o o o by charged particle beam [CPB], e.g. focused ion beam repair or correction of defects	par un faisceau de particules chargées [CPB charged particle beam], p.ex. réparation ou correction de défauts par un faisceau d'ions focalisé
N	1/76	o o Patterning of masks by imaging	Création des motifs d'un masque par imagerie
N	1/78	o o o by charged particle beam [CPB], e.g. electron beam patterning of masks	par un faisceau de particules chargées [CPB charged particle beam], p.ex. création des motifs d'un masque par un faisceau d'électrons
N	1/80	o o Etching	Attaque chimique
N	1/82	o o Auxiliary processes, e.g. cleaning or inspecting	Procédés auxiliaires, p.ex. nettoyage ou inspection
N	1/84	o o o Inspecting	Inspection
N	1/86	o o o o by charged particle beam [CPB]	au moyen d'un faisceau de particules chargées [CPB charged particle beam]
N	1/88	o by photographic processes for production of originals simulating relief	par des procédés photographiques pour la production d'originaux simulant le relief
N	1/90	o by montage processes	par des procédés de montage
N	1/92	o from printing surfaces	à partir de surfaces d'impression

Formatted: French France

IPC/A 027
ORIGINAL: English/French
DATE: 23.11.2009

WORLD INTELLECTUAL PROPERTY ORGANIZATION
ORGANISATION MONDIALE DE LA PROPRIÉTÉ INTELLECTUELLE

GENEVA/GENÈVE

COMMITTEE OF EXPERTS OF THE IPC UNION
COMITÉ D'EXPERTS DE L'UNION DE L'IPC

AL REVISION PROJECT FILE
DOSSIER DE PROJET RÉVISION NIVEAU ÉLEVÉ

PROPOSAL BY : **EP** **PROPOSITION DE :**	**IPC AREA:** **H04B 1/69, H04J 13/00** **DOMAINE DE LA CIB :**
RAPPORTEUR : **EP**	**TECHNICAL FIELD :** **E** **DOMAINE TECHNIQUE :**

ANNEX/ ANNEXE	CONTENT/CONTENU		ORIGIN/ ORIGINE	DATE
1	Decision of the subcommittee	Décision du cous-comité	IB	20.03.2009
2	Initial Proposal	Proposition Initiale	EP	31.03.2009
3	Comments	Observations	SE	29.04.2009
4	Comments	Observations	DE	30.04.2009
5	Comments	Observations	JP	15.05.2009
6	Rapporteur report	Rapport du rapporteur	EP	29.05.2009
7	Comments	Observations	IB	29.05.2009
8	Rapporteur report	Rapport du rapporteur	EP	08.06.2009
9	Working Group decision	Décision du groupe de travail	IB	03.08.2009
10	Comments	Observations	RU	27.08.2009
11	Comments	Observations	JP	28.08.2009
12	List of cross references	Liste des renvois	IB	31.08.2009
13	Comments	Observations	US	11.09.2009
14	French version	Version française	IB	17.09.2009
15	Rapporteur report	Rapport du rapporteur	EP	29.10.2009
16	Proposal - RCL	Proposition - RCL	EP	02.11.2009
17	Proposal - definitions	Proposition - définitions	EP	09.11.2009

ANNEX/ ANNEXE	CONTENT/CONTENU		ORIGIN/ ORIGINE	DATE
18	Comments	Observations	US	19.11.2009
19	Comments	Observations	US	19.11.2009

EXCERPT FROM DOCUMENT IPC/WG/21/2
EXTRAIT DU DOCUMENT IPC/WG/21/2

REPORT ON THE SEVENTH SESSION OF THE IPC ADVANCED LEVEL SUBCOMMITTEE

17. Since the seventh session of the ALS was the final one, all pending A projects were included in the program of the Working Group. From now on, A projects will designate revision projects originating from the IP5 Offices and C projects will designate revision projects that would be included in the IPC revision program by the Committee. For practical reasons, the schemes adopted by the ALS in the framework of projects A 012, A 013, A 014, A 017, A 018 and A 020 were included in the Technical Annexes of this session (see Technical Annexes 1 to 7 and 9 to this report).

IPC REVISION PROGRAM

General

25. The Working Group noted the decision by the Committee of Experts at its forty-first session that revision projects, including advanced level revision projects, would be considered by the Working Group and forwarded to the Committee for final adoption after completion. It was noted that projects originating from the Trilateral or the IP5 Offices cooperation will be designated by the letter “A” and revision projects included in the IPC revision program by the Committee will be designated by the letter “C” (see paragraph 17, above).

26. Discussions were based on compilations of the relevant revision project files. The Working Group considered nine pending C projects, plus 17 A projects forwarded from the former ALS, and approved amendments relating to those projects (see Technical Annexes 1 to 29 to this report relating to revision projects). The status of those projects and the list of future actions and deadlines are indicated in Annex III to this report.

IPC Revision Projects

27. The Working Group made the following observations with respect to the IPC revision projects. All references to annexes in this paragraph refer to annexes of the corresponding project file, unless otherwise stated.

Project A 027 (electrical) – The Working Group approved, with some amendments, the English version of Annex 8 (see Technical Annexes 15E and 16E to this report).

Comments were invited on:

– whether the term “multi-paths” was correctly used in the light of the intended scope of subgroup H04B 1/7115;

– whether the “i.e.” in the approved title of subgroup H04B 1/7176 should be replaced by “e.g.”;

– whether the mutual references in groups H04B 1/69 and H04J 13/00 were desirable and what was the relationship between the two groups. Attention of the Rapporteur of project D 193 for subclass H04J was drawn to the comments to be submitted on these questions; and

– whether the reference in group H04J 13/00 pointing to group H04B 1/713 was limiting.

The Rapporteur was requested to provide definitions and a RCL, and the International Bureau was invited to prepare a French version and a CRL.

RAPPORT SUR LA SEPTIÈME SESSION DU SOUS-COMITÉ CHARGÉ DU NIVEAU ÉLEVÉ DE LA CIB

17. Étant donné que la septième session de l'ALS était la dernière, tous les projets A en instance ont été inscrits au programme du groupe du travail. Dorénavant, les projets A désigneront les projets de révision émanant des offices de l'IP5 et les projets C désigneront les projets de révision qui seront inscrits au programme de révision de la CIB par le comité. Pour des raisons pratiques, les schémas adoptés par l'ALS dans le cadre des projets A 012, A 013, A 014, A 017, A 018 et A 020 ont été inclus dans les annexes techniques du rapport sur la session en cours (voir les annexes techniques 1 à 7 et 9 du présent rapport).

PROGRAMME DE RÉVISION DE LA CIB

Généralités

25. Le groupe de travail a pris note de la décision prise par le comité d'experts à sa quarante et unième session selon laquelle les projets de révision, y compris ceux relatifs au niveau élevé, seront examinés par le groupe de travail et transmis au comité pour adoption définitive une fois achevés. Il a été pris note du fait que les projets émanant des offices de la coopération trilatérale ou de l'IP5 seraient désignés par la lettre "A" et que les projets de révision inscrits au programme de révision de la CIB par le comité seraient désignés par la lettre "C" (voir le paragraphe 17).

26. Les délibérations ont eu lieu sur la base de synthèses des dossiers de projet correspondants. Le groupe de travail a examiné neuf projets C en instance ainsi que 17 projets A transmis par l'ancien ALS et a approuvé les modifications relatives à ces projets (voir les annexes techniques 1 à 29 du présent rapport relatives aux projets de révision). L'état d'avancement de ces projets et la liste des mesures à prendre et des délais correspondants font l'objet de l'annexe III du présent rapport.

Projets de révision de la CIB

27. Le groupe de travail a formulé les observations ci-après concernant les projets de révision de la CIB. Dans le présent paragraphe, tout renvoi à des annexes désigne, sauf indication contraire, les annexes du dossier de projet correspondant.

Projet A 027 (électricité) – Le groupe de travail a approuvé, sous réserve de certaines modifications, la version anglaise figurant à l'annexe 8 (voir les annexes techniques 15E et 16E du présent rapport).

Des observations ont été demandées

– sur le point de savoir si le terme "multi-paths" était correctement utilisé compte tenu de la portée envisagée du sous-groupe H04B 1/7115;

– sur le point de savoir s'il convenait de remplacer "i.e." par "e.g." dans le titre du sous-groupe H04B 1/7176;

– sur le point de savoir si les renvois mutuels dans les groupes H04B 1/69 et H04J 13/00 étaient souhaitables et sur le lien entre ces deux groupes. L'attention du rapporteur du projet D 193 pour la sous-classe H04J a été appelée sur les observations à soumettre sur ces questions; et

– sur le point de savoir si le renvoi au groupe H04B 1/713 figurant dans le groupe H04J 13/00 était un renvoi de limitation.

Le rapporteur a été prié d'établir des définitions et une table de concordance et le Bureau international a été invité à établir une version française et une table des renvois croisés.

ANNEX 15E H04B [Project-Rapporteur : A027/EP <WG21>]

CL C *1/69* · *Spread spectrum techniques*

CL N *1/692* · · *Hybrid techniques using combinations of two or more spread spectrum techniques*

CL C *1/707* · · *using direct sequence modulation*

AL N *1/7073* · · · *Synchronisation aspects*

AL N *1/7075* · · · · *with code phase acquisition*

AL N *1/7077* · · · · · *Multi-step acquisition, e.g. multi-dwell, coarse-fine or validation*

AL N *1/708* · · · · · *Parallel implementation*

AL N *1/7083* · · · · *Cell search, e.g. using a three-step approach*

AL N *1/7085* · · · · *using a code tracking loop, e.g. a delay-locked loop*

AL N *1/7087* · · · · *Carrier synchronisation aspects*

AL N *1/709* · · · *Correlator structure*

AL N *1/7093* · · · · *Matched filter type*

AL N *1/7095* · · · · *Sliding correlator type*

AL N *1/7097* · · · *Interference-related aspects*

AL N *1/710* · · · · *the interference being narrowband interference*

AL N *1/7103* · · · · *the interference being multiple access interference*

AL N *1/7105* · · · · · *Joint detection techniques, e.g. linear detectors*

AL N *1/7107* · · · · · *Subtractive interference cancellation*

AL N *1/711* · · · · *the interference being multi-path interference*

AL N *1/7113* · · · · · *Determination of path profile*

AL N *1/7115* · · · · · *Constructive combining of multi-paths, i.e. RAKE receivers*

AL N *1/7117* · · · · · · *Selection, re-selection, allocation or re-allocation of paths to fingers, e.g. timing offset control of allocated fingers*

AL N *1/712* · · · · · · *Weighting of fingers for combining, e.g. amplitude control or phase rotation using an inner loop*

AL C *1/713* · · *using frequency hopping*

AL N *1/7136* · · · *Arrangements for generation of hop frequencies, e.g. using a bank of frequency sources, using continuous tuning or using a transform*

AL N *1/7143* · · · *Arrangements for generation of hop patterns*

AL N *1/715* · · · *Interference-related aspects*

AL N *1/7156* · · · *Arrangements for sequence synchronisation*

AL N *1/7163* · · *using impulse radio*

AL N *1/717* · · · *Pulse-related aspects*

AL N *1/7176* · · · *Data mapping, i.e. modulation*

AL N *1/7183* · · · *Synchronisation*

AL N *1/719* · · · *Interference-related aspects*

ANNEX 16E H04J [Project-Rapporteur : A027/EP <WG21>]

CL C ***13/00*** ***Code division multiplex systems***

CL D 13/02 (transferred to **H04J 13/00-H04J 13/22**)

	AL	D	13/04	(transferred to **H04J 13/00-H04J 13/22**)
	AL	D	13/06	(transferred to **H04J 13/00-H04J 13/22**)
CL	N	*13/10*	·	*Code generation*
AL	N	*13/12*	· ·	*Generation of orthogonal codes*
AL	N	*13/14*	· ·	*Generation of codes with a zero correlation zone*
CL	N	*13/16*	·	*Code allocation*
AL	N	*13/18*	· ·	*Allocation of orthogonal codes*
AL	N	*13/20*	· · ·	*having an orthogonal variable spreading factor [OVSF]*
AL	N	*13/22*	· ·	*Allocation of codes with a zero correlation zone*

FEDERAL INSTITUTE OF INDUSTRIAL PROPERTY

RU comments	
Project : A 027	**Date: 27.08.2009**
Class/Subclass : H04B	

On the last session the Working Group invited the comments concerning the following:

1) - whether the term “multi-path” was correctly used in the light of the intended scope of subgroup H04B 1/7115;

We believe that this term is used correctly. The “multi-path” means the as propagation of direct signal and as propagation of reflected signals. Reflected signal is the main signal multiple reflected from buildings, land surfaces, ets., and different from main signal by phase and amplitude. Rake – receiver has several input channels for receiving and processing these signals. Based on above we think that term “multi-path” should be stay in text of H04B 1/7115.

2) - whether the “i.e.” in the approved title of subgroup H04B 1/7176 should be replaced by “e.g”;

We think that in this case we have deal with the process of transforming data from one type to another. The transforming is executed in different ways, not only by modulation/demodulation. So it should be better to replace by “e.g.” in text of the group.

3) – whether the mutual references in groups H04B 1/69 and H04J 13/00 were desirable and what was the relationships between two groups.

and

4) – whether the reference in group H04J 13/00 to group H04B 1/713 is limitimg.

We suppose that when the subject matter is a method of spread spectrum (e.g. method of Frequency Hopping Spread Spectrum) it should be classified in the

group H04B 1/713. But coding methods not necessarily are used for spread spectrum. Therefore the subject matter concerning a coding method for spread spectrum it should be classified in the group H04B 1/713. So the reference in the group H04J 13/00 to group H04B 1/713 is limitimg and that mutual references H04B 1/69 and H04J 13/00 are desirable.

Zoya Voytsekhovskaya

JAPAN PATENT OFFICE

August 28, 2009

Project: A027 Subclass: H04B, H04J

JP Comment

Ref: Annex 9, Working Group decision, 03-AUG-2009

JP thanks IB for the posting of several decisions covering this project A027 from the report of the 21st meeting of IPC Revision Working Group (IPC/WG/21/2) as Annex 9 of the project file. In response to 4 questions raised therein, JP would like to state as follows.

1. Use of "multi-paths"; right of wrong?

If the addition of "signals" or any other word after "multi-path" might make clear the meaning in English, i.e. if the use of the term "multi-path signals", for example, instead of "multi-paths" would possibly remove some doubts, JP assumes that such an addition would be a solution to this issue. JP would leave the matter of proper choice of word to be added or of the appropriate wording/phrasing to the offices in native English speaking countries.

2. "i.e." or "e.g."; which is better?

JP considers that "e.g." would be more appropriate in the title of H04B 1/7176 due to the reasoning that "modulation" is not identical to "data mapping."

3. Relationship between H04B 1/69 and H04J 13/00?
4. Relationship between H04B 1/713 and H04J 13/00?

Since CDMA-related applications include two types of technique (i.e. SS technique (H04B1/69) and Multiplex communication using code (H04J13/00)), JP anticipates there would be more cases wherein the classification is given in the groups under both subclasses. The classification should be properly given depending on the technical subject of each case.

In such circumstances, JP would like to propose to enter the following Note after the title of H04B 1/69 and H04J 13/00 respectively.

<JP proposal>

H04B

1/69 ・Spread spectrum techniques

Note (s)

Code division multiplex systems, which is considered to represent information of interest for search, may also be classified in H04J 13/00.

H04J

13/00 Code division multiplex systems

Note (s)

Spread spectrum techniques, which is considered to represent information of interest for search, may also be classified in H04B 1/69

Frequency hopping, which is considered to represent information of interest for search, may also be classified in H04B 1/713.

[END]

WORLD INTELLECTUAL PROPERTY ORGANIZATION	
IPC REVISION WORKING GROUP	
Project: **A 027:** H04B, H04J List of cross references	Date: June, 2009

References affected by revision project A027 (H04B, H04J)

Del. or C-mod. existing group	**Ref to this group**	**Proposed amendment**	**Comment**
H04B 1/69	H04K 1/00	**Secret communication** (ciphering or deciphering apparatus per se G09C; systems with reduced bandwidth or suppressed carrier H04B 1/66; spread spectrum techniques ~~in general~~ H04B 1/69; by using a ……)	
	H04L 9/00	**Arrangements for secret or secure communication (**spread spectrum techniques ~~in general~~ H04B 1/69**)**	
H04B 1/707	None		
H04B 1/713	None		
H04J 13/00	None		
H04J 13/02	None		
H04J 13/04	None		
H04J 13/06	None		

United States Patent and Trademark Office	
Topic: **Project A027-T067** **H04J13, H04B1/69-713**	**Date: 11 September 2009**

Ref: Annex 8, 08 June 2009: EP Rapporteur Report
Annex 9, 03 August 2009 : Working Group Decision
Annex 10, 27 August 2009: RU Comments
Annex 11, 28 August 2009: JP Comments
Annex 12, 31 August 2009: IB Cross Reference List

US thanks EP for its Rapporteur report, the IB for its Working Group Decision and Cross Reference List, and RU and JP for their comments.

Referring to questions raised by the Working Group (Annex 9, paragraph 27):

US is in agreement with JP Comments 1-4 presented in Annex 11.

[End]

Decisions of session / Décisions par session WG/21

ANNEXE 1E,F H04B [Projet-Rapporteur : A027/EP] <WG21>

EN: questionWithApproval CL , C	*1/69*	· *Spread spectrum techniques*	*Techniques d'étalement de spectre*
EN: approve CL , N	*1/692*	· · *Hybrid techniques using combinations of two or more spread spectrum techniques*	*Techniques hybrides utilisant des combinaisons d'au moins deux techniques d'étalement de spectre*
EN: approve CL , C	*1/707*	· · *using direct sequence modulation*	*utilisant une modulation à séquence directe*
EN: approve AL , N	*1/7073*	· · · *Synchronisation aspects*	*Aspects de la synchronisation*
EN: approve AL , N	*1/7075*	· · · · *with code phase acquisition*	*avec acquisition de phase de code*
EN: approve AL , N	*1/7077*	· · · · · *Multi-step acquisition, e.g. multi-dwell, coarse-fine or validation*	*Acquisition en plusieurs étapes, p.ex. à temps de tenue multiples, approximative-précise ou validation*
EN: approve AL , N	*1/708*	· · · · · *Parallel implementation*	*Implémentation parallèle*
EN: approve AL , N	*1/7083*	· · · · *Cell search, e.g. using a three-step approach*	*Recherche de cellules, p.ex. utilisant une approche en trois étapes*
EN: approve AL , N	*1/7085*	· · · · *using a code tracking loop, e.g. a delay-locked loop*	*utilisant une boucle de poursuite de code, p.ex. une boucle à temporisation asservie*
EN: approve AL , N	*1/7087*	· · · · *Carrier synchronisation aspects*	*Aspects de la synchronisation de la porteuse*
EN: approve AL , N	*1/709*	· · · *Correlator structure*	*Structure du corrélateur*
EN: approve AL , N	*1/7093*	· · · · *Matched filter type*	*Du type à filtre adapté*
EN: approve AL , N	*1/7095*	· · · · *Sliding correlator type*	*Du type corrélateur à dérive*
EN: approve AL , N	*1/7097*	· · · *Interference-related aspects*	*Aspects liés aux parasites*
EN: approve AL , N	*1/710*	· · · · *the interference being narrowband interference*	*les parasites étant des parasites à bande étroite*
EN: approve AL , N	*1/7103*	· · · · *the interference being multiple access interference*	*les parasites étant des parasites d'accès multiple*

EN: approve AL , N	*1/7105*	· · · · · *Joint detection techniques, e.g. linear detectors*	*Techniques de détection conjointe, p.ex. détecteurs linéaires*
EN: approve AL , N	*1/7107*	· · · · · *Subtractive interference cancellation*	*Élimination soustractive des parasites*
EN: approve AL , N	*1/711*	· · · · *the interference being multi-path interference*	*les parasites étant des parasites par trajets multiples*
EN: approve AL , N	*1/7113*	· · · · · *Determination of path profile*	*Détermination du profil de trajet*
EN: questionWithApproval AL , N	*1/7115*	· · · · · *Constructive combining of multi-paths, i.e. RAKE receivers*	*Combinaison constructive de trajets multiples, p.ex. récepteurs de RAKE*
EN: approve AL , N	*1/7117*	· · · · · · *Selection, re-selection, allocation or re-allocation of paths to fingers, e.g. timing offset control of allocated fingers*	*Sélection, resélection, attribution ou réattribution des trajets aux contacts, p.ex. limitation du décalage de synchronisation des contacts attribués*
EN: approve AL , N	*1/712*	· · · · · · *Weighting of fingers for combining, e.g. amplitude control or phase rotation using an inner loop*	*Pondération des contacts pour combiner, p.ex. la commande d'amplitude ou la rotation de phase à l'aide d'une boucle interne*
EN: approve AL , C	*1/713*	· · *using frequency hopping*	*utilisant des sauts de fréquence*
EN: approve AL , N	*1/7136*	· · · *Arrangements for generation of hop frequencies, e.g. using a bank of frequency sources, using continuous tuning or using a transform*	*Dispositions pour la production de fréquences à sauts, p.ex. utilisant une batterie de sources de fréquence, un accord continu ou une transformée*
EN: approve AL , N	*1/7143*	· · · *Arrangements for generation of hop patterns*	*Dispositions pour la production de séquences de sauts*
EN: approve AL , N	*1/715*	· · · *Interference-related aspects*	*Aspects liés aux parasites*
EN: approve AL , N	*1/7156*	· · · *Arrangements for sequence synchronisation*	*Dispositions pour la synchronisation des séquences*
EN: approve AL , N	*1/7163*	· · *using impulse radio*	*utilisant un signal radio impulsionnel*
EN: approve AL , N	*1/717*	· · · *Pulse-related aspects*	*Aspects liés aux impulsions*
EN: questionWithApproval AL , N	*1/7176*	· · · *Data mapping, i.e. modulation*	*Cartographie des données, p.ex. modulation*
EN: approve AL , N	*1/7183*	· · · *Synchronisation*	*Synchronisation*
EN: approve AL , N	*1/719*	· · · *Interference-related aspects*	*Aspects liés aux parasites*

EN: questionWithApproval CL , C	***13/00***	***Code division multiplex systems***	***Systèmes de multiplexage en code***
EN: approve CL , D	13/02	(transferred to **H04J 13/00-H04J 13/22**)	(transféré en **H04J 13/00-H04J 13/22**)
EN: approve AL , D	13/04	(transferred to **H04J 13/00-H04J 13/22**)	(transféré en **H04J 13/00-H04J 13/22**)
EN: approve AL , D	13/06	(transferred to **H04J 13/00-H04J 13/22**)	(transféré en **H04J 13/00-H04J 13/22**)
EN: approve CL , N	*13/10*	· *Code generation*	*Génération de codes*
EN: approve AL , N	*13/12*	· · *Generation of orthogonal codes*	*Génération de codes orthogonaux*
EN: approve AL , N	*13/14*	· · *Generation of codes with a zero correlation zone*	*Génération de codes avec une zone de corrélation nulle*
EN: approve CL , N	*13/16*	· *Code allocation*	*Attribution de codes*
EN: approve AL , N	*13/18*	· · *Allocation of orthogonal codes*	*Attribution de codes orthogonaux*
EN: approve AL , N	*13/20*	· · · *having an orthogonal variable spreading factor [OVSF]*	*ayant un facteur d'étalement variable orthogonal [OVSF]*
EN: approve AL , N	*13/22*	· · *Allocation of codes with a zero correlation zone*	*Attribution de codes avec une zone de corrélation nulle*

Schéma existant pour aide à la traduction.

H04B 1/00		**Details of transmission systems, not covered by a single one of groups H04B 3/00-H04B 13/00; Details of transmission systems not characterised by the medium used for transmission** (tuning resonant circuits**H03J**) **[4]** **Détails des systèmes de transmission, non couverts par l'un des groupes H04B 3/00-H04B 13/00; Détails des systèmes de transmission non caractérisés par le milieu utilisé pour la transmission** (accord des circuits résonnants **H03J**) **[4]**	
	H04B 1/02	· Transmitters (spatial arrangements of component circuits in radio pills for living beings**A61B 5/07**) Emetteurs (dispositions spatiales des circuits dans les micro-émetteurs pour recherche sur les êtres vivants **A61B 5/07**)	
	H04B 1/03	· · Constructional details, e.g. casings, housings **[2]** Détails de structure, p.ex. boîtiers, enveloppes **[2]**	
	H04B 1/034	· · · Portable transmitters **[2]** Emetteurs portatifs **[2]**	
	H04B 1/036	· · · Cooling arrangements (cooling	

transformers **H01F 27/08**; cooling discharge tubes **H01J 7/24**, **H01J 19/74**) **[2]** Dispositions pour le refroidissement (refroidissement des transformateurs **H01F 27/08**; refroidissement des tubes à décharge **H01J 7/24**, **H01J 19/74**) **[2]**

H04B 1/04 · · Circuits (of television transmitters **H04N 5/38**) Circuits (d'émetteurs de télévision **H04N 5/38**)

H04B 1/06 · Receivers (control of amplification **H03G**; television receivers **H04N 5/44**, **H04N 5/64**) Récepteurs (réglage de l'amplification**H03G**; récepteurs de télévision**H04N 5/44**, **H04N 5/64**)

H04B 1/08 · · Constructional details, e.g. cabinet Détails de structure, p.ex. ébénisterie

H04B 1/10 · · Means associated with receiver for limiting or suppressing noise or interference Dispositifs associés au récepteur pour limiter ou supprimer le bruit et les interférences

H04B 1/12 · · · Neutralising, balancing, or compensation arrangements Montages de neutralisation, d'équilibrage ou de compensation

H04B 1/14 · · · Automatic detuning arrangements Montages de désaccord automatique

H04B 1/16 · · Circuits Circuits

H04B 1/18 · · · Input circuits, e.g. for coupling to an aerial or a transmission line (input circuits for amplifiers in general **H03F**; coupling networks between aerials or lines and receivers independent of the nature of the receiver **H03H**) Circuits d'entrée, p.ex. pour le couplage à une antenne ou à une ligne de **transmission** (circuits d'entrée pour amplificateur en général **H03F**; réseaux de couplage entre antennes ou lignes et récepteurs, indépendants de la nature du récepteur**H03H**)

H04B 1/20 · · · for coupling gramophone pick-up, recorder output, or microphone to receiver pour couplage d'un pick-up de gramophone, des bornes de sortie d'un enregistreur ou d'un microphone, à un récepteur

H04B 1/22 · · · for receivers in which no local oscillation is generated pour récepteurs ne comportant pas la génération d'une onde locale

H04B 1/24 · · · · the receiver comprising at least one semiconductor device having three or more electrodes le récepteur comportant au moins un dispositif semi-conducteur ayant trois électrodes ou plus

H04B 1/26 · · · for **superheterodyne receivers** (multiple frequency-changing **H03D 7/16**) pour récepteurs superhétérodynes (changement de fréquence multiple**H03D 7/16**)

H04B 1/28 · · · · the receiver comprising at least one semiconductor device having three or more electrodes le récepteur comportant au moins un dispositif à semi-conducteurs ayant trois électrodes ou plus

H04B 1/30 · · · for homodyne or **synchrodyne receivers** (demodulator circuits **H03D 1/22**) pour récepteurs homodynes ou synchrodynes (circuits démodulateurs **H03D 1/22**)

H04B 1/38 · Transceivers, i.e. devices in which transmitter and receiver form a structural unit and in which at least one part is used for functions of transmitting and receiving Emetteurs récepteurs, c. à d. dispositifs dans lesquels l'émetteur et le récepteur forment un ensemble structural et dans lesquels au moins une partie est utilisée pour des fonctions d'émission et de réception

H04B 1/40 · · Circuits Circuits

H04B 1/44 · · · Transmit/receive switching (in radar systems **G01S**; tubes therefor **H01J 17/64**; waveguide switches **H01P 1/10**) **[2]** Commutation **transmission** -réception (dans les systèmes radars**G01S**; tubes pour cette fonction **H01J 17/64**; commutateurs de guide d'onde **H01P 1/10**) **[2]**

H04B 1/46 · · · · by voice-frequency signals; by pilot signals par signaux à fréquence vocale; par signaux pilotes

H04B 1/48 · · · · in circuit for connecting transmitter and receiver to a common transmission path, e.g. by energy of transmitter Circuits pour connecter l'émetteur et le récepteur à une voie de **transmission** commune, p.ex. par l'énergie de l'émetteur

H04B 1/50 · · · using different frequencies for the two directions of communication utilisant des fréquences différentes pour les deux directions de la communication

H04B 1/52 · · · · Hybrid arrangements, i.e. for transition from single-path two-way transmission to single transmission on each of two paths, or vice versa Montages hybrides, c. à d. pour la transition bilatérale à une voie, à une seule **transmission** sur chacune des deux voies et vice versa

H04B 1/54 · · · using the same frequency for both directions of communication (**H04B 1/44** takes precedence) utilisant la même fréquence pour les deux directions de la communication (**H04B 1/44** a priorité)

H04B 1/56 · · · · with provision for simultaneous communication in both directions avec possibilité de communication simultanée dans les deux directions

H04B 1/58 · · · · Hybrid arrangements, i.e. for transition from single-path two-way transmission to single transmission on each of two paths, or vice versa Montages hybrides, c. à d. pour la transition d'une **transmission** bilatérale sur une voie à une **transmission** sur chacune des deux voies et vice versa

H04B 1/59 · Responders; Transponders (relay systems **H04B 7/14**) Répondeurs; Transpondeurs (systèmes relais**H04B 7/14**)

H04B 1/60 · Supervising unattended repeaters

Supervision des stations de répéteurs non surveillés

H04B 1/62 · for providing a predistortion of the signal in the transmitter and corresponding correction in the receiver, e.g. for improving the signal/noise ratio pour produire une prédistorsion du signal à l'émission et une correction correspondante à la réception, p.ex. pour améliorer le rapport signal/bruit

H04B 1/64 · · Volume compression or expansion arrangements Montages pour la compression ou l'expansion du volume

H04B 1/66 · for reducing bandwidth of signals (in speech analysis-synthesis techniques **G10L 19/00**; in pictorial communication systems **H04N**); for improving efficiency of transmission (**H04B 1/68** takes precedence) pour réduire la largeur de bande des signaux (dans les techniques d'analyse ou de synthèse de la parole**G10L 19/00**; dans les systèmes de **transmission** d'images**H04N**); pour améliorer l'efficacité de la **transmission** (**H04B 1/68** a priorité)

H04B 1/68 · for wholly or partially suppressing the carrier or one side band **[4]** pour supprimer totalement ou partiellement la porteuse ou une bande latérale **[4]**

H04B 1/69 · Spread spectrum techniques in general (for code multiplex systems **H04J 13/02**) **[6]** Techniques d'étalement de spectre en général (pour systèmes multiplex codés **H04J 13/02**) **[6]**

H04B 1/707 · · using direct sequence modulation **[6]** utilisant une modulation à séquence directe **[6]**

H04B 1/713 · · using frequency hopping **[6]** utilisant une évasion de fréquence **[6]**

H04B 1/72 · Circuits or components for simulating aerials, e.g. dummy aerial (dissipative waveguide terminations **H01P 1/26**) Circuits ou composants pour simuler les antennes, p.ex. antenne fictive (terminaisons de guide d'onde dispersives **H01P 1/26**)

H04B 1/74 · for increasing reliability, e.g. using redundant or spare channels or **apparatus** **[3]** pour augmenter la fiabilité, p.ex. en utilisant des canaux ou des **appareils** supplémentaires ou de réserve **[3]**

H04B 1/76 · Pilot transmitters or receivers for control of transmission or for equalising **[3]** Emetteurs ou récepteurs pilotes pour la commande de la **transmission** ou pour l'égalisation **[3]**

H04J 1/00 **Frequency-division multiplex systems** (**H04J 14/00** takes precedence) **[5]** **Systèmes multiplex à division de fréquence** (**H04J 14/00** a priorité) **[5]**

H04J 1/02 · Details Détails

H04J 1/04 · · Frequency-transposition arrangements Dispositions à transposition de fréquence

H04J 1/05 · · · using digital techniques **[3]** utilisant les techniques numériques **[3]**

H04J 1/06 · · **Arrangements for** supplying the carrier waves Dispositions pour produire les ondes porteuses

H04J 1/08 · · **Arrangements for** combining channels Dispositions pour combiner les canaux

H04J 1/10 · · Intermediate station arrangements, e.g. for branching, for tapping-off Aménagements des stations intermédiaires, p.ex. pour connecter et déconnecter

H04J 1/12 · · **Arrangements for** reducing cross-talk between channels Dispositions pour réduire la diaphonie entre canaux

H04J 1/14 · · Arrangements providing for calling or supervisory signals Dispositions pour produire des signaux d'appel ou de surveillance

H04J 1/16 · · Monitoring arrangements Dispositions de contrôle

H04J 1/18 · in which all the carriers are amplitude-modulated (**H04J 1/02** takes precedence) **[3]** dans lesquels toutes les ondes porteuses sont modulées en amplitude (**H04J 1/02** a priorité) **[3]**

H04J 1/20 · in which at least one carrier is angle-modulated (**H04J 1/02** takes precedence) **[3]** dans lesquels au moins une onde porteuse est modulée angulairement (**H04J 1/02** a priorité) **[3]**

H04J 3/00 **Time-division multiplex systems** (**H04J 14/00** takes precedence; relay systems **H04B 7/14**; selecting techniques **H04Q**) **[4,5]** **Systèmes multiplex à division de temps** (**H04J 14/00** a priorité; systèmes relais**H04B 7/14**; techniques de sélection **H04Q**) **[4,5]**

H04J 3/02 · Details (electronic switching or gating **H03K 17/00**) Détails (commutation ou ouverture de porte électronique**H03K 17/00**)

H04J 3/04 · · Distributors combined with modulators or demodulators Distributeurs combinés avec des modulateurs ou des démodulateurs

H04J 3/06 · · Synchronising arrangements Dispositions de synchronisation

H04J 3/07 · · · using pulse stuffing for systems with

different or fluctuating information rates **[3]** utilisant le bourrage d'impulsions pour les systèmes à débits d'informations différents ou variables **[3]**

H04J 3/08 · · Intermediate station arrangements, e.g. for branching, for tapping-off Dispositions de stations intermédiaires, p.ex. pour connecter et déconnecter

H04J 3/10 · · **Arrangements for** reducing cross-talk between channels Dispositions pour reduire la diaphonie entre canaux

H04J 3/12 · · Arrangements providing for calling or supervisory signals Dispositions pour produire les signaux d'appel ou de surveillance

H04J 3/14 · · Monitoring arrangements Dispositifs de contrôle

H04J 3/16 · in which the time allocation to individual channels within a transmission cycle is variable, e.g. to accommodate varying complexity of signals, to vary number of channels transmitted **H04J 3/17**, **H04J 3/24** take precedence) **[4]** dans lesquels le temps attribué à chacun des canaux au cours d'un cycle de **transmission** est variable, p.ex. pour tenir compte de la complexité variable des signaux, pour adapter le nombre de canaux transmis (**H04J 3/17**, **H04J 3/24** ont priorité) **[4]**

H04J 3/17 · in which the transmission channel allotted to a first user may be taken away and re-allotted to a second user if the first user becomes inactive, e.g. TASI **[4]** dans lesquels le canal de **transmission** attribué à un premier usager peut être repris et assigné à un second usager si le premier devient non actif, p.ex. TASI **[4]**

H04J 3/18 · using frequency compression and subsequent expansion of the individual signals utilisant la compression de fréquence et l'expansion consécutive des signaux individuels

H04J 3/20 · using resonant transfer **[2]** utilisant le transfert résonnant **[2]**

H04J 3/22 · in which the sources have different rates or codes **[4]** dans lesquels les sources ont des débits ou des codes différents **[4]**

H04J 3/24 · in which the allocation is indicated by an address (**H04J 3/17** takes precedence; in computers **G06F 12/00**, **G06F 13/00**) **[4]** dans lesquels l'attribution est indiquée par une adresse (**H04J 3/17** a priorité; dans les calculateurs **G06F 12/00**, **G06F 13/00**) **[4]**

H04J 3/26 · · in which the information and the address are simultaneously transmitted **[4]** dans lesquels l'information et l'adresse sont transmises simultanément **[4]**

H04J 4/00 **Combined time-division and frequency-division multiplex systems**

	(**H04J 13/00** takes precedence) **[2]** **Systèmes multiplex combinés à division de temps et à division de fréquence** (**H04J 13/00** a priorité) **[2]**	
H04J 7/00	**Multiplex systems in which the amplitudes or durations of the signals in individual channels are characteristic of those channels** **Systèmes multiplex dans lesquels les amplitudes ou les durées des signaux dans chacun des canaux caractérisent ces signaux**	C
H04J 7/02	· in which the polarity of the amplitude is characteristic caractérisés par la polarité de l'amplitude	
H04J 9/00	**Multiplex systems in which each channel is represented by a different type of modulation of the carrier** **Systèmes multiplex dans lesquels chaque canal est représenté par un type différent de modulation de la porteuse**	C
H04J 11/00	**Orthogonal multiplex systems** (**H04J 13/00** takes precedence) **[2]** **Systèmes multiplex orthogonaux** (**H04J 13/00** a priorité) **[2]**	C
H04J 13/00	**Code multiplex systems** **[2]** **Systèmes multiplex codés** **[2]**	C
H04J 13/02	· using spread spectrum techniques **[6]** utilisant des techniques d'étalement de spectre **[6]**	C
H04J 13/04	· · using direct sequence modulation **[6]** utilisant une modulation à séquence directe **[6]**	
H04J 13/06	· · using frequency hopping **[6]** utilisant une évasion de fréquence **[6]**	
H04J 14/00	**Optical multiplex systems** (optical coupling, mixing or splitting, per se **G02B**) **[5]** **Systèmes multiplex optiques** (couplage, mélange ou division optiques en soi **G02B**) **[5]**	C
H04J 14/02	· Wavelength-division multiplex systems **[5]** Systèmes multiplex à division de longueur d'onde **[5]**	C
H04J 14/04	· Mode multiplex systems **[5]** Systèmes multiplex par mode **[5]**	C
H04J 14/06	· Polarisation multiplex systems **[5]** Systèmes multiplex par polarisation **[5]**	C
H04J 14/08	· Time-division multiplex systems **[5]** Systèmes multiplex à division de temps **[5]**	C
H04J 15/00	*(transferred to **H04J 99/00**)* *(transféré en **H04J 99/00**)*	C
H04J 99/00	***Subject matter not provided for in other groups of this subclass*** **[2009.01]** ***Matière non prévue dans les autres groupes de la présente sous-classe*** **[2009.01]**	

Principal Directorate Patent Grant Automation - Directorate Classification		
Project: **A027**	Spread spectrum communication	IPC range: **H04B, H04J**
Rapporteur Report		28 Oct 2009

Ref: Annex 9, IB Working Group decision, 03-Aug-09
Annex 10, RU comments, 27-Aug-09
Annex 11, JP comments, 28-Aug-09
Annex 12, IB List of cross references, 31-Aug-09
Annex 13, US comments, 11-Sep-09

Regarding the questions raised in Annex 9, R offers the following remarks:

- R agrees with JP (annex 11) and RU (annex 10) that the term "multi-paths" was used correctly. However R believes that the proposal by JP to use the term "multi-path signals" would remove any doubts.
- R agrees with JP (annex 11) and RU (annex 10) that the "e.g." would be more appropriate than the "i.e.". The reason being that the way in which data symbols are translated into actual waveforms and pulses may be different from a modulation.
- R agrees with JP (annex 11) and RU (annex 10) that the mutual references in groups H04B 1/69 and H04J 13/00 are desirable. Techniques relating to spread spectrum can be used outside the context of CDMA. Such techniques would be considered to belong in H04B 1/69 and not H04J 13/00. Further, some documents relating to CDMA may concern details of how the signals are physically received and processed. Such documents would be considered to belong to H04B 1/69. Other documents may concern aspects of the codes used for dividing the transmission bandwidth. Such documents would be considered to belong to H04J 13/00. R agrees with JP that there will be some unavoidable technical overlap.
- Regarding the question whether the reference in group H04J13/00 to group H04B 1/713 is limiting, R refers to the discussions that were held during the tri-lateral meetings. Here it was agreed that although frequency hopping can be used for CDMA (i.e. FH-CDMA), the concepts dealt with in H04J 13/00 do not have relevance for FH-CDMA. It was therefore agreed that frequency hopping is excluded from H04J 13/00 even if it is used within the context of multiple access.
- Upon the scheme as already approved by the Working Group R therefore proposes the following amendments:

H04B 1/69 Spread spectrum techniques
Note(s)
When classifying in this group, any aspect of code division multiplexing, which is considered to represent information of interest for search, may also be classified in group H04J 13/00

H04J 13/00 Code division multiplex systems (for frequency hopping H04B 1/713)
Note(s)
When classifying in this group, any aspect of spread spectrum techniques not specific to frequency hopping, and which is considered to represent information of interest for search, may also be classified in group H04B 1/69

H04B 1/7115 5 dots *Constructive combining of multi-path~~s~~ signals, i.e. RAKE receivers*

H04B 1/7176 3 dots *Data mapping, ~~i.e.~~ e.g. modulation*

Emma O'Donnabhain, Michael Bossen

Ruben de Bekker

Principal Directorate Patent Grant Automation - Directorate Classification		
Project: **A027**	Spread spectrum communication	IPC range: **H04B, H04J**
Revision Concordancy List		28 Oct 2009

OLD	NEW	COMMENTS
H04J 13/00	H04J 13/00 to H04J 13/22	
H04J 13/02	H04J 13/00 to H04J 13/22	
H04J 13/04	H04J 13/00 to H04J 13/22 and H04B 1/707 to H04B 1/712	
H04J 13/06	H04B 1/713 to H04B 1/7156	
H04B 1/69	H04B 1/69 to H04B 1/692 and H04B 1/7163 to H04B 1/719	
H04B 1/707	H04B 1/707 to H04B 1/712	
H04B 1/713	H04B 1/713 to H04B 1/7156	

Principal Directorate Patent Grant Automation - Directorate Classification		
Project: **A027**	Spread spectrum communication	IPC range: **H04B, H04J**
Proposal Definitions		6 Nov 2009

Ref: Annex 9, IB Working Group decision, 03-Aug-09

Regarding the request to provide Definitions, as stated raised in Annex 9, R proposes the following definitions:

PART 1: H04J 13/00
PART 2: H04B 1/69

See attached annexes.

Emma O'Donnabhain, Michael Bossen

Ruben de Bekker

PART 1

Title - H04J 13/00

Code division multiplex systems

Definition statement

This main group covers:

Code division multiplexing techniques. These are techniques by which the communication medium is divided according to codes.

Aspects that are covered include types of codes, generation of codes and allocation of codes to channels.

Relationship between large subject matter areas

With regard to spread-spectrum techniques, the borderline between H04J 13/00 and H04B 1/69 should be determined based on whether the features relevant for classification are focused on the code multiplexing aspects or the implementation of the spread-spectrum technique (e.g. details of how the signals are physically transmitted, received and processed).

Documents classified in H04J 13/00 containing aspects of spectral spreading of interest for search, may also be classified in group H04B 1/69.

With regard to systems that use frequency hopping as a means to divide the communication medium, it has been agreed that that frequency hopping is excluded from H04J 13/00 even if it is used within the context of multiple access. Because the concepts dealt with in H04J 13/00 do not have relevance for FH-CDMA even though frequency hopping can be used for CDMA (i.e. FH-CDMA), this subject-matter is exclusively classified in H04B 1/713.

References relevant to classification in this group

This group does not cover:

Details of the signal processing which are covered by	H04B 1/69
systems that use frequency hopping as a means to divide the communication medium	H04B 1/713
MC-CDMA	H04J 11/00

Informative references

Attention is drawn to the following places, which may be of interest for search:

implementation of the spread-spectrum technique	H04B 1/69

Special rules of classification within this group

NONE.

Glossary of terms

In this group, the following terms (or expressions) are used with the meaning indicated:

Synonyms and Keywords

In patent documents the following abbreviations are often used:

CDMA	***Code Division Multiple Access***
MC-CDMA	multi-carrier ***Code Division Multiple Access***
OVSF	orthogonal variable spreading factor

In patent documents the following expressions/words "---", "---" and "---" are often used as synonyms.

In patent documents the expression/word "---" is often used instead of "---" which is used in the classification scheme of this group.

In patent documents the expression/word "---" is often used with the meaning "---"

PART 2

Title - H04B 1/69

Spread spectrum techniques

Definition statement

This subgroup covers:

Spread-spectrum techniques represent methods by which communication energy generated in a particular bandwidth is deliberately spread in the frequency domain, resulting in a signal with a wider bandwidth.

Relationship between large subject matter areas

With regard to code multiplexing, the borderline between H04B 1/69 and H04J 13/00 should be determined based on whether the features relevant for classification are focused on the code multiplexing aspects or the implementation of the spread-spectrum technique (e.g. details of how the signals are physically transmitted, received and processed).

Documents classified in H04B 1/69 containing aspects of code multiplexing of interest for search, may also be classified in group H04J 13/00.

References relevant to classification in this subgroup

This subgroup does not cover:

Informative references

Attention is drawn to the following places, which may be of interest for search:

code multiplexing	H04J 13/00

Special rules of classification within this subgroup

NONE.

Glossary of terms

In this subgroup, the following terms (or expressions) are used with the meaning indicated:

RAKE	A receiver comprising sub-receivers called fingers

	which each detect a single multpath component. The contributions of fingers can be combined at a later stage.

Synonyms and Keywords

In patent documents the following abbreviations are often used:

UWB	ultra-wideband

In patent documents the following expressions/words "---", "---" and "---" are often used as synonyms.

In patent documents the expression/word "---" is often used instead of "---" which is used in the classification scheme of this subgroup.

In patent documents the expression/word "---" is often used with the meaning "---"

Title - H04B 1/692

Hybrid Techniques using combinations of two or more spread spectrum techniques

Definition statement

This subgroup covers:

This group covers hybrids of spread spectrum techniques, e.g. frequency hopping/direct-sequence systems, time-hopping/direct-sequence systems.

Title - H04B 1/707

Using direct sequence modulation

Definition statement

This subgroup covers:

This group covers direct-sequence spread-spectrum techniques which directly modulate the data being transmitted by a spreading code whose frequency (chip rate) is much higher than the modulated bandwidth of the data signal (symbol rate).

Aspects relating to the codes e.g. types of codes, code generation and code allocation are classified in H04J 13.

Informative references

Attention is drawn to the following places, which may be of interest for search:

carrier synchronization per se	H04L 7/06

Title - H04B 1/713

Using frequency hopping

Definition statement

This subgroup covers:

Frequency-hopping spread spectrum which is a method of transmitting radio signals by switching a carrier among many frequency channels, using a sequence known to both transmitter and receiver.

Title - H04B 1/7163

Using impulse radio

Definition statement

This subgroup covers:

This group covers impulse radio spread spectrum which is an ultra-wideband (UWB) communication system that transmits baseband pulses of very short duration (typically of the order of a nanosecond) with bandwidths that span from near dc to several GHz.

References relevant to classification in this subgroup

This subgroup does not cover:

non-pulse systems which meet the requirements of the FCC mask for UWB communication (e.g. UWB OFDM systems)	H04J 11 /00, H04L 27/26 or H04L 5/00

United States Patent and Trademark Office	
Topic: **Project A027** **H04J13 and H04B1/69-719**	**Date: 19 November 2009**

Ref: Annex 17, 09 November 2009: EP proposed definitions

US thanks EP for its proposed definitions.

Please find in Annex 19, US suggested changes to EP's proposed definitions via track changes.

While most of the changes are minor editorial ones, US would like to point out the following:

A/ Under "References relevant to classification in this group" section of the H04J 13/00:

- The limiting reference to H04B 1/69 as shown under the definition is not required. US believes H04B 1/69 is correctly listed as an informative reference under the "Informative references" section of the H04J 13/00 definition. Further, as presented in EP Rapporteur Report of Annex 15 (reproduced below), the TOs have agreed with the note under H04J 13/00 indicating H04B 1/69 is an informative reference.

H04J 13/00 Code division multiplex systems (for frequency hopping H04B 1/713)
Note(s)
When classifying in this group, any aspect of spread spectrum techniques not specific to frequency hopping, and which is considered to represent information of interest for search, may also be classified in group H04B 1/69.

- The limiting reference H04B 1/713 title has been changed to "Details of the signal processing which are covered by systems that use frequency hopping as a means to divide the communication medium".

B/ US would like to remind Rapporteur that all informative references should be removed from the scheme.

[End]

Title - H04J 13/00

Code division multiplex systems

Definition statement

This main group covers:

Code division multiplexing techniques which are related to the division of the communications medium. ~~These are techniques by which the communication medium is divided~~ according to codes.

Aspects that are covered include types of codes, generation of codes and allocation of codes to channels.

Relationship between large subject matter areas

With regard to spread-spectrum techniques, the borderline between H04J 13/00 and H04B 1/69 should be determined based on whether the features relevant for classification are focused on the code multiplexing aspects or the implementation of the spread-spectrum technique (e.g. details of how the signals are physically transmitted, received and processed).

Documents classified in H04J 13/00 containing aspects of spectral spreading of interest for search, may also be classified in group H04B 1/69.

With regard to systems that use frequency hopping as a means to divide the communication medium, it has been agreed that that frequency hopping is excluded from H04J 13/00 even if it is used within the context of multiple access. Because the concepts dealt with in H04J 13/00 do not have relevance for FH-CDMA even though frequency hopping can be used for CDMA (i.e. FH-CDMA), this subject-matter is exclusively classified in H04B 1/713.

References relevant to classification in this group

This group does not cover:

~~Details of the signal processing which are covered by~~	~~H04B 1/69~~
Details of the signal processing which are covered by systems that use frequency hopping as a means to divide the communication medium	H04B 1/713
MC-CDMA	H04J 11/00

Informative references

Attention is drawn to the following places, which may be of interest for search:

~~i~~Implementation of the spread-spectrum technique	H04B 1/69

Special rules of classification within this group

NONE.

Glossary of terms

In this group, the following terms (or expressions) are used with the meaning indicated:

Synonyms and Keywords

In patent documents the following abbreviations are often used:

CDMA	***Code Division Multiple Access***
MC-CDMA	~~m~~Multi-carrier ***Code Division Multiple Access***
OVSF	~~o~~Orthogonal variable spreading factor

In patent documents the following expressions/words "---", "---" and "---" are often used as synonyms.

In patent documents the expression/word "---" is often used instead of "---" which is used in the classification scheme of this group.

In patent documents the expression/word "---" is often used with the meaning "---"

PART 2

Title - H04B 1/69

Spread spectrum techniques

Definition statement

This subgroup covers:

Spread-spectrum techniques representing methods by which communication energy generated in a particular bandwidth is deliberately spread in the frequency domain, resulting in a signal with a wider bandwidth.

Relationship between large subject matter areas

With regard to code multiplexing, the borderline between H04B 1/69 and H04J 13/00 should be determined based on whether the features relevant for classification are focused on the code multiplexing aspects or the implementation of the spread-spectrum technique (e.g. details of how the signals are physically transmitted, received and processed).

Documents classified in H04B 1/69 containing aspects of code multiplexing of interest for search, may also be classified in group H04J 13/00.

References relevant to classification in this subgroup

This subgroup does not cover:

Informative references

Attention is drawn to the following places, which may be of interest for search:

~~c~~Code multiplexing	H04J 13/00

Special rules of classification within this subgroup

NONE.

Glossary of terms

In this subgroup, the following terms (or expressions) are used with the meaning indicated:

RAKE	A receiver comprising sub-receivers called fingers

	wherein ~~which~~ each finger detects a single multpath component. The contributions of the fingers can be combined at a later stage.

Synonyms and Keywords

In patent documents the following abbreviations are often used:

UWB	ultra-wideband

In patent documents the following expressions/words "---", "---" and "---" are often used as synonyms.

In patent documents the expression/word "---" is often used instead of "---" which is used in the classification scheme of this subgroup.

In patent documents the expression/word "---" is often used with the meaning "---"

Title - H04B 1/692

Hybrid Techniques using combinations of two or more spread spectrum techniques

Definition statement

This subgroup covers:

~~This group covers h~~Hybrids of spread spectrum techniques, e.g. frequency hopping/direct-sequence systems, time-hopping/direct-sequence systems.

Title - H04B 1/707

Using direct sequence modulation

Definition statement

This subgroup covers:

~~This group covers d~~Direct-sequence spread-spectrum techniques which directly modulate the data being transmitted by a spreading code whose frequency (chip rate) is much higher than the modulated bandwidth of the data signal (symbol rate).

Aspects relating to the codes e.g. types of codes, code generation and code allocation are classified in H04J 13.

Informative references

Attention is drawn to the following places, which may be of interest for search:

~~c~~Carrier synchronization per se	H04L 7/06

Title - H04B 1/713

Using frequency hopping

Definition statement

This subgroup covers:

Frequency-hopping spread spectrum techniques which involve ~~is a method of~~ transmitting radio signals by switching a carrier among many frequency channels, using a hopping sequence known to both transmitter and receiver.

Title - H04B 1/7163

Using impulse radio

Definition statement

This subgroup covers:

~~This group covers i~~Impulse radio spread spectrum which involve ~~is~~ an ultra-wideband (UWB) communication system that transmits baseband pulses of very short duration (typically of the order of a nanosecond) with bandwidths that span from near dc to several GHz.

References relevant to classification in this subgroup

This subgroup does not cover:

N~~n~~on-pulse systems which meet the requirements of the FCC mask for UWB communication (e.g. UWB OFDM systems)	H04J 11 /00, H04L 27/26 or H04L 5/00

IPC/A 029
ORIGINAL: English/French
DATE: 12.11.2009

WORLD INTELLECTUAL PROPERTY ORGANIZATION
ORGANISATION MONDIALE DE LA PROPRIÉTÉ INTELLECTUELLE

GENEVA/GENÈVE

COMMITTEE OF EXPERTS OF THE IPC UNION
COMITÉ D'EXPERTS DE L'UNION DE L'IPC

AL REVISION PROJECT FILE
DOSSIER DE PROJET RÉVISION NIVEAU ÉLEVÉ

PROPOSAL BY : **EP** **PROPOSITION DE :**	**IPC AREA:** **H04N 5/335** **DOMAINE DE LA CIB :**
RAPPORTEUR : **EP**	**TECHNICAL FIELD :** **E** **DOMAINE TECHNIQUE :**

ANNEX/ ANNEXE	CONTENT/CONTENU		ORIGIN/ ORIGINE	DATE
1	Decision of the subcommittee	Décision du cous-comité	IB	20.03.2009
2	Initial Proposal	Proposition Initiale	EP	26.03.2009
3	Comments	Observations	SE	29.04.2009
4	Rapporteur report	Rapport du rapporteur	EP	05.06.2009
5	Proposal - scheme	Proposition - schéma	EP	05.06.2009
6	Comments	Observations	JP	10.06.2009
7	Working Group decision	Décision du groupe de travail	IB	03.08.2009
8	List of cross references	Liste des renvois	IB	31.08.2009
9	French version	Version française	IB	01.10.2009
10	Proposal - RCL	Proposition - RCL	EP	07.10.2009
11	Proposal - scheme	Proposition - schéma	EP	29.10.2009
12	Comments	Observations	FR	06.11.2009

EXCERPT FROM DOCUMENT IPC/WG/21/2
EXTRAIT DU DOCUMENT IPC/WG/21/2

REPORT ON THE SEVENTH SESSION OF THE IPC ADVANCED LEVEL SUBCOMMITTEE

17. Since the seventh session of the ALS was the final one, all pending A projects were included in the program of the Working Group. From now on, A projects will designate revision projects originating from the IP5 Offices and C projects will designate revision projects that would be included in the IPC revision program by the Committee. For practical reasons, the schemes adopted by the ALS in the framework of projects A 012, A 013, A 014, A 017, A 018 and A 020 were included in the Technical Annexes of this session (see Technical Annexes 1 to 7 and 9 to this report).

IPC REVISION PROGRAM

General

25. The Working Group noted the decision by the Committee of Experts at its forty-first session that revision projects, including advanced level revision projects, would be considered by the Working Group and forwarded to the Committee for final adoption after completion. It was noted that projects originating from the Trilateral or the IP5 Offices cooperation will be designated by the letter “A” and revision projects included in the IPC revision program by the Committee will be designated by the letter “C” (see paragraph 17, above).

26. Discussions were based on compilations of the relevant revision project files. The Working Group considered nine pending C projects, plus 17 A projects forwarded from the former ALS, and approved amendments relating to those projects (see Technical Annexes 1 to 29 to this report relating to revision projects). The status of those projects and the list of future actions and deadlines are indicated in Annex III to this report.

IPC Revision Projects

27. The Working Group made the following observations with respect to the IPC revision projects. All references to annexes in this paragraph refer to annexes of the corresponding project file, unless otherwise stated.

Project A 029 (electrical) – The English version of Annex 5 was approved with some amendments (see Technical Annex 18E to this report).

The Rapporteur was requested to consider whether the example in the title of subgroup H04N 5/341 should read differently, such as “e.g. by modifying the number of pixels sampled”.

The Rapporteur was further requested to prepare definitions for subgroups and a RCL, and the International Bureau was invited to provide a French version and a CRL.

RAPPORT SUR LA SEPTIÈME SESSION DU SOUS-COMITÉ CHARGÉ DU NIVEAU ÉLEVÉ DE LA CIB

17. Étant donné que la septième session de l'ALS était la dernière, tous les projets A en instance ont été inscrits au programme du groupe du travail. Dorénavant, les projets A désigneront les projets de révision émanant des offices de l'IP5 et les projets C désigneront les projets de révision qui seront inscrits au programme de révision de la CIB par le comité. Pour des raisons pratiques, les schémas adoptés par l'ALS dans le cadre des projets A 012, A 013, A 014, A 017, A 018 et A 020 ont été inclus dans les annexes techniques du rapport sur la session en cours (voir les annexes techniques 1 à 7 et 9 du présent rapport).

PROGRAMME DE RÉVISION DE LA CIB

Généralités

25. Le groupe de travail a pris note de la décision prise par le comité d'experts à sa quarante et unième session selon laquelle les projets de révision, y compris ceux relatifs au niveau élevé, seront examinés par le groupe de travail et transmis au comité pour adoption définitive une fois achevés. Il a été pris note du fait que les projets émanant des offices de la coopération trilatérale ou de l'IP5 seraient désignés par la lettre "A" et que les projets de révision inscrits au programme de révision de la CIB par le comité seraient désignés par la lettre "C" (voir le paragraphe 17).

26. Les délibérations ont eu lieu sur la base de synthèses des dossiers de projet correspondants. Le groupe de travail a examiné neuf projets C en instance ainsi que 17 projets A transmis par l'ancien ALS et a approuvé les modifications relatives à ces projets (voir les annexes techniques 1 à 29 du présent rapport relatives aux projets de révision). L'état d'avancement de ces projets et la liste des mesures à prendre et des délais correspondants font l'objet de l'annexe III du présent rapport.

Projets de révision de la CIB

27. Le groupe de travail a formulé les observations ci-après concernant les projets de révision de la CIB. Dans le présent paragraphe, tout renvoi à des annexes désigne, sauf indication contraire, les annexes du dossier de projet correspondant.

Projet A 029 (électricité) – La version anglaise figurant à l'annexe 5 a été approuvée sous réserve de certaines modifications (voir l'annexe technique 18E du présent rapport)

Le rapporteur a été prié de déterminer s'il convenait de modifier le libellé de l'exemple figurant dans le titre du sous-groupage H04N 5/341, en l'intitulant par exemple "e.g. by modifying the number of pixels sampled".

Le rapporteur a également été prié d'établir des définitions pour les sous-groupes ainsi qu'une table de concordance et le Bureau international a été invité à établir une version française et une table des renvois croisés.

ANNEX 18E H04N **[Project-Rapporteur : A029/EP <WG21>]**

CL C *3/14* · · *by means of electrically scanned solid-state devices (for picture generation **H04N 5/335**)*

CL D 3/15 (transferred to **H04N 5/335**)

CL C *5/217* · · · *in picture signal generation (noise reduction or noise suppression involving solid-state image sensors **H04N 5/357**)*

CL C *5/335* · · *using solid-state image sensors [SSIS] (**H04N 5/32**, **H04N 5/33** take precedence)*

CL N *Note*
5/335 In this group, at each hierarchical level, in the absence of an indication to the contrary, classification is made in the first appropriate place. ***[new.]***

AL N *5/341* · · · *Extracting pixel data from an image sensor by controlling scanning circuits, e.g. by modifying the number of pixels*

AL N *5/343* · · · · *by switching between different modes of operation using different resolutions or aspect ratios, e.g. between still and video mode or between interlaced and non-interlaced mode*

AL N *5/345* · · · · *by partially reading an SSIS array*

AL N *5/347* · · · · *by combining or binning pixels in SSIS*

AL N *5/349* · · · · *for increasing resolution by shifting the sensor relative to the scene*

AL N *5/351* · · · *Control of the SSIS depending on the scene, e.g. brightness or motion in the scene*

AL N *5/353* · · · · *Control of the integration time*

AL N *5/355* · · · · *Control of the dynamic range*

AL N *5/357* · · · *Noise processing, e.g. detecting, correcting, reducing or removing noise*

AL N *5/359* · · · · *applied to excess charges produced by the exposure, e.g. smear, blooming, ghost image, crosstalk or leakage between pixels*

AL N *5/361* · · · · *applied to dark current*

AL N *5/363* · · · · *applied to reset noise, e.g. KTC noise*

AL N *5/365* · · · · *applied to fixed-pattern noise, e.g. non-uniformity of response*

AL N *5/367* · · · · · *applied to defects, e.g. non-responsive pixels*

AL N *5/369* · · · *SSIS architecture; Circuitry associated therewith*

AL N *5/372* · · · · *Charge-coupled device [CCD] sensors; Time delay and integration [TDI] registers or shift registers specially adapted for SSIS*

AL N *5/3722* · · · · · *using frame interline transfer [FIT]*

AL N *5/3725* · · · · · *using frame transfer [FT]*

AL N *5/3728* · · · · · *using interline transfer [IT]*

AL N *5/374* · · · · *Addressed sensors, e.g. MOS or CMOS sensors*

AL N *5/3745* · · · · · *having additional components embedded within a pixel or connected to a group of pixels within a sensor matrix, e.g. memories, A/D converters, pixel amplifiers, shared circuits or shared components*

AL N *5/376* · · · · *Addressing circuits*

AL N *5/378* · · · · *Readout circuits, e.g. correlated double sampling [CDS] circuits, output amplifiers or A/D converters*

WORLD INTELLECTUAL PROPERTY ORGANIZATION	
IPC REVISION WORKING GROUP	
Project: **A 029:** H04N List of cross references	Date: July, 2009

<u>References affected by revision project A029 (H04N)</u>

Del. or C-mod. existing group	**Ref to this group**	**Proposed amendment**	**Comment**
H04N 3/14	None		
H04N 3/15	None		
H04N 5/217	H04N 5/213	Circuitry for suppressing or minimising impulsive noise (H04N 5/217 takes precedence) – **No action needed**	
H04N 5/335	None		

WORLD INTELLECTUAL PROPERTY ORGANIZATION	
IPC ADVANCED LEVEL SUBCOMMITTEE	
Project: **A 029** Draft French version	**Date: September 30, 2009**

	H04N	**[Projet-Rapporteur : A029/EP]**	**<WG21>**
EN: approve CL , C	*3/14*	· · *by means of electrically scanned solid-state devices (for picture generation* ***H04N 5/335****)*	*au moyen de dispositifs à semi-conducteurs à balayage électronique (pour la production des images* ***H04N 5/335****)*
EN: approve CL , D	3/15	(transferred to **H04N 5/335**)	(transféré en **H04N 5/335**)
EN: approve CL , C	*5/217*	· · · *in picture signal generation (noise reduction or noise suppression involving solid-state image sensors* ***H04N 5/357****)*	*lors de la production des signaux d'image (réduction ou élimination du bruit faisant intervenir des capteurs d'images à semi-conducteurs* ***H04N 5/357****)*
EN: approve CL , C	*5/335*	· · *using solid-state image sensors [SSIS] (****H04N 5/32****,* ***H04N 5/33*** *take precedence)*	*utilisant des capteurs d'images à semi-conducteurs [SSIS] (****H04N 5/32****,* ***H04N 5/33*** *ont priorité)*
EN: approve CL , N	*Note 5/335*	In this group, at each hierarchical level, in the absence of an indication to the contrary, classification is made in the first appropriate place. **[new.]**	Dans le présent groupe, à chaque niveau hiérarchique, sauf indication contraire, le classement s'effectue à la première place appropriée
EN: questionWithApproval AL , N	*5/341*	· · · *Extracting pixel data from an image sensor by controlling scanning circuits, e.g. by modifying the number of pixels*	*Extraction de données de pixels provenant d'un capteur d'images en agissant sur les circuits de balayage, p.ex. en modifiant le nombre de pixels*
EN: approve AL , N	*5/343*	· · · · *by switching between different modes of operation using different resolutions or aspect ratios, e.g. between still and video mode or between interlaced and non-interlaced mode*	*en commutant entre différents modes de fonctionnement utilisant des résolutions ou des formats d'images différents, p.ex. entre un mode d'images fixes et un mode d'images vidéo ou entre un mode entrelacé et un mode non entrelacé*
EN: approve AL , N	*5/345*	· · · · *by partially reading an SSIS array*	*en lisant partiellement une matrice SSIS*
EN: approve AL , N	*5/347*	· · · · *by combining or binning pixels in SSIS*	*en combinant ou en mettant en binaire les pixels dans le SSIS*
EN: approve AL , N	*5 /349*	· · · · *for increasing resolution by shifting the sensor relative to the scene*	*pour accroître la résolution en déplaçant le capteur par rapport à la scène*
EN: approve	*5/351*	· · · *Control of the SSIS depending on*	*Réglage du SSIS en fonction de la*

AL , N		*the scene, e.g. brightness or motion in the scene*	*scène, p.ex. luminosité ou mouvement dans la scène*
EN: approve AL , N	*5/353*	· · · · *Control of the integration time*	*Réglage du temps d'intégration*
EN: approve AL , N	*5/355*	· · · · *Control of the dynamic range*	*Réglage de la gamme dynamique*
EN: approve AL , N	*5/357*	· · · *Noise processing, e.g. detecting, correcting, reducing or removing noise*	*Traitement du bruit, p.ex. détection, correction, réduction ou élimination du bruit*
EN: approve AL , N	*5/359*	· · · · *applied to excess charges produced by the exposure, e.g. smear, blooming, ghost image, crosstalk or leakage between pixels*	*appliqué aux porteurs de charge en excès générés par l'exposition, p.ex. bavure, tache, image fantôme, diaphonie ou fuite entre les pixels*
EN: approve AL , N	*5/361*	· · · · *applied to dark current*	*appliqué au courant d'obscurité*
EN: approve AL , N	*5/363*	· · · · *applied to reset noise, e.g. KTC noise*	*appliqué au bruit de réinitialisation, p.ex. bruit KTC*
EN: approve AL , N	*5/365*	· · · · *applied to fixed-pattern noise, e.g. non-uniformity of response*	*appliqué au bruit stable, p.ex. non-uniformité de la réponse*
EN: approve AL , N	*5/367*	· · · · · *applied to defects, e.g. non-responsive pixels*	*appliqué aux défauts, p.ex. pixels non réactifs*
EN: approve AL , N	*5/369*	· · · *SSIS architecture; Circuitry associated therewith*	*architecture du SSIS ; circuits associés à cette dernière*
EN: approve AL , N	*5/372*	· · · · *Charge-coupled device [CCD] sensors; Time delay and integration [TDI] registers or shift registers specially adapted for SSIS*	*Capteurs* à *dispositif à couplage de charge [CCD] ; registres de temporisation et d'intégration [TDI] ou registres à décalage spécialement adaptés au SSIS*
EN: approve AL , N	*5/3722*	· · · · · *using frame interline transfer [FIT]*	*utilisant le transfert d'image interligne [FIT]*
EN: approve AL , N	*5/3725*	· · · · · *using frame transfer [FT]*	*utilisant le transfert d'image [FT]*
EN: approve AL , N	*5/3728*	· · · · · *using interline transfer [IT]*	*utilisant le transfert interligne [IT]*
EN: approve AL , N	*5/374*	· · · · *Addressed sensors, e.g. MOS or CMOS sensors*	*Capteurs disposant d'une adresse, p.ex. capteurs MOS ou CMOS*
EN: approve AL , N	*5/3745*	· · · · · *having additional components embedded within a pixel or connected to a group of pixels within a sensor matrix, e.g. memories, A/D converters, pixel amplifiers, shared circuits or shared components*	*ayant des composants supplémentaires incorporés au sein d'un pixel ou connectés à un groupe de pixels au sein d'une matrice de capteurs, p.ex. mémoires, convertisseurs A/N, amplificateurs de pixels, circuits communs ou composants communs*
EN: approve AL , N	*5/376*	· · · · *Addressing circuits*	*Circuits d'adressage*

EN: approve AL , N	*5/378*	· · · · *Readout circuits, e.g. correlated double sampling [CDS] circuits, output amplifiers or A/D converters*	*Circuits de lecture, p.ex. circuits d'échantillonnage double corrélé [CDS], amplificateurs de sortie ou convertisseurs A/N*

Schéma existant pour aide à la traduction.

	H04N 3/00	**Scanning details of television systems; Combination thereof with generation of supply voltages [4] Détails des dispositifs de balayage des systèmes de télévision; Leur combinaison avec la production des tensions d'alimentation [4]**	
	H04N 3/02	· by optical-mechanical means only (**H04N 3/36** takes precedence; optical scanning systems in general **G02B 26/10**) **[2]** par des moyens optiques-mécaniques uniquement (**H04N 3/36** a priorité; systèmes de balayage optique en général **G02B 26/10**) **[2]**	
	H04N 3/04	· · having a moving aperture à ouverture mobile	
	H04N 3/06	· · having a moving lens or other refractor comportant une lentille mobile ou autre réfracteur	
	H04N 3/08	· · having a moving reflector comportant un réflecteur mobile	
	H04N 3/09	· · · for electromagnetic radiation in the invisible region, e.g. infra-red **[4]** pour rayonnement électromagnétique dans la région invisible, p.ex. pour l'infrarouge **[4]**	
	H04N 3/10	· by means not exclusively optical-mechanical (**H04N 3/36** takes precedence; devices or **arrangements for** the electro-, magneto- or acousto-optical modulation or deflection of light beams **G02F**) **[2]** par des moyens non exclusivement optiques-mécaniques (**H04N 3/36** a priorité; dispositifs ou systèmes pour la modulation de déflexion électro-, magnéto- ou acousto-optique de faisceaux lumineux **G02F**) **[2]**	
	H04N 3/12	· · by switched stationary formation of lamps, photocells, or light relays par commutation de groupes de lampes, cellules photo-électriques ou relais de lumière stationnaires	
	H04N 3/14	· · by means of electrically scanned solid-state devices au moyen de dispositifs à semi-conducteurs électriquement balayés	
	H04N 3/15	· · · for picture signal generation **[3]** pour la production des signaux d'image **[3]**	
	H04N 3/16	· · by deflecting electron beam in cathode-ray tube (producing sawtooth waveforms **H03K 4/00**) par déviation d'un faisceau d'électrons dans un tube cathodique (production des ondes en dents de scie **H03K 4/00**)	

H04N 3/18 · · · Generation of supply voltages, in combination with electron beam deflecting **[4]** Production des tensions d'alimentation en combinaison avec la déviation d'un faisceau d'électrons **[4]**

H04N 3/185 · · · · Maintaining dc voltage constant (regulation of dc voltage in general **G05F**) **[4]** Maintien de la tension à courant continu à une **valeur** constante (régulation de tension à courant continu en général **G05F**) **[4]**

H04N 3/19 · · · · Arrangements or assemblies in supply circuits for the purpose of withstanding high voltages **[3]** Dispositions ou montages des circuits d'alimentation en vue de supporter la haute tension **[3]**

H04N 3/20 · · · Prevention of damage to cathode-ray tubes in event of failure of scanning Protection du tube à rayons cathodiques en cas d'arrêt du balayage

H04N 3/22 · · · Circuits for controlling dimensions, shape or centering of picture on screen Circuits pour régler les dimensions, la forme ou le centrage de l'image sur l'écran

H04N 3/223 · · · · Controlling dimensions (by maintaining the cathode-ray tube high voltage constant **H04N 3/185**) **[4]** Réglage des dimensions (en maintenant constante la haute tension du tube à rayons cathodiques **H04N 3/185**) **[4]**

H04N 3/227 · · · · Centering **[4]** Centrage **[4]**

H04N 3/23 · · · · Distortion correction, e.g. for pincushion distortion correction, S-correction **[4]** Correction de la distorsion, p.ex. pour corriger la distorsion en coussin ou la distorsion en S **[4]**

H04N 3/233 · · · · · using active elements **[4]** utilisant des éléments actifs **[4]**

H04N 3/237 · · · · · using passive elements **[4]** utilisant des éléments passifs **[4]**

H04N 3/24 · · · Blanking circuits Circuits de suppression

H04N 3/26 · · · Modifications of scanning arrangements to improve focusing (focusing circuits in general **H01J**) Modifications des dispositifs de balayage pour améliorer la focalisation (circuits de focalisation en général **H01J**)

H04N 3/27 · · · Circuits special to multi-standard receivers (circuitry of multi-standard receivers in general **H04N 5/46**) **[3,4]** Circuits particuliers pour récepteurs multi-normes (circuits pour récepteurs multi-normes en général **H04N 5/46**) **[3,4]**

H04N 3/28 · · producing multiple scanning, i.e. using more than one spot at the same time produisant un balayage multiple, c. à d. utilisant plus d'un spot à la fois

H04N 3/30 · · otherwise than with constant velocity or

	otherwise than in pattern formed by unidirectional, straight, substantially horizontal or vertical lines autrement qu'à vitesse constante ou autrement que par image formée par des lignes unidirectionnelles rectilignes ou essentiellement horizontales ou verticales	
H04N 3/32	· · · Velocity varied in dependence upon picture information Vitesse variable en fonction de l'information de l'image	
H04N 3/34	· · · Elemental scanning area oscillated rapidly in direction transverse to main scanning direction Surface de balayage élémentaire oscillant rapidement dans le sens perpendiculaire aux lignes de balayage	
H04N 3/36	· Scanning of motion picture films, e.g. for telecine **[2]** Balayage de films cinématographiques, p.ex. pour le télécinéma **[2]**	C
H04N 3/38	· · with continuously moving film **[4]** avec déplacement continu du film **[4]**	
H04N 3/40	· · with intermittently moving film **[4]** avec déplacement intermittent du film **[4]**	
H04N 5/00	**Details of television systems** (scanning details or combination thereof with generation of supply voltages **H04N 3/00**; specially adapted for colour television **H04N 9/00**) **[4]** **Détails des systèmes de télévision** (détails du balayage ou leur combinaison avec la production des tensions d'alimentation **H04N 3/00**; spécialement adaptés à la télévision en couleurs **H04N 9/00**) **[4]**	C
H04N 5/04	· Synchronising (for television systems using pulse code modulation **H04N 7/24**; in general **H03L 7/00**) **[4]** Synchronisation (pour les systèmes de télévision utilisant la modulation par impulsions codées **H04N 7/24**; en général **H03L 7/00**) **[4]**	C
H04N 5/05	· · Synchronising circuits with **arrangements for** extending range of synchronisation, e.g. by using switching between several time constants **[2]** Circuits de synchronisation avec dispositions pour étendre la plage de synchronisation, p.ex. en utilisant la commutation entre différentes bases de temps **[2]**	
H04N 5/06	· · Generation of synchronising signals Production de signaux de synchronisation	C
H04N 5/067	· · · Arrangements or circuits at the transmitter end **[4]** Dispositions ou circuits du côté émetteur **[4]**	C
H04N 5/073	· · · · for mutually locking plural sources of synchronising signals, e.g. studios or relay stations **[4]** pour verrouiller mutuellement plusieurs sources de signaux de synchronisation, p.ex. studios ou relais de télévision **[4]**	
H04N 5/08	· · Separation of synchronising signals from picture signals Séparation des signaux de synchronisation du signal d'image	C

H04N 5/10 · · · Separation of line synchronising signal from frame synchronising signal Séparation des signaux de synchronisation de ligne des signaux de synchronisation d'image

H04N 5/12 · · Devices in which the synchronising signals are only operative if a phase difference occurs between synchronising and synchronised scanning devices, e.g. flywheel synchronising **[2]** Dispositifs dans lesquels les signaux de synchronisation ne sont actifs que si une différence de phase se **produit** entre les dispositifs de synchronisation et les dispositifs de balayage synchronisés, p.ex. synchronisation à volants **[2]**

H04N 5/14 · Picture signal circuitry for video frequency region (**H04N 5/222** takes precedence) **[2]** Circuits de signal d'image pour le domaine des fréquences vidéo (**H04N 5/222** a priorité) **[2]**

H04N 5/16 · · Circuitry for reinsertion of dc and slowly varying components of signal; Circuitry for preservation of black or white level Circuits pour la réinsertion de la composante continue; Circuits pour la préservation des niveaux du blanc et du noir

H04N 5/18 · · · by means of "clamp" circuit operated by switching circuit par le moyen de circuit de blocage commandé par un circuit de commutation

H04N 5/20 · · Circuitry for controlling amplitude response Circuits pour la commande de la courbe de réponse en amplitude

H04N 5/202 · · · Gamma control **[4]** Commande du gamma **[4]**

H04N 5/205 · · · for correcting amplitude versus frequency characteristic **[4]** pour corriger l'amplitude en fonction de la caractéristique de fréquence **[4]**

H04N 5/208 · · · · for compensating for attenuation of high frequency components, e.g. crispening, aperture distortion correction **[4]** pour compenser l'atténuation des composantes haute fréquence, p.ex. accentuation des contrastes, correction de la distorsion d'ouverture **[4]**

H04N 5/21 · · Circuitry for suppressing or minimising disturbance, e.g. moire, halo (suppression of noise in television recording **H04N 5/911**) Circuits pour la suppression ou la diminution de perturbations, p.ex. moiré, halo (suppression du bruit pour l'enregistrement de signaux de télévision **H04N 5/911**)

H04N 5/213 · · · Circuitry for suppressing or minimising impulsive noise (**H04N 5/217** takes precedence) **[4]** Circuits pour supprimer ou diminuer les bruits d'impulsions (**H04N 5/217** a priorité) **[4]**

H04N 5/217 · · · in picture signal generation **[4]** à la formation du signal d'image **[4]**

H04N 5/222 · Studio circuitry; Studio devices; Studio

equipment **[4]** Circuits de studio; Dispositifs de studio; Equipements de studio **[4]**

H04N 5/225 · · Television cameras **[4]** Caméras de télévision **[4]**

H04N 5/228 · · · Circuit details for pick-up tubes **[4]** Détails de circuits pour tubes analyseurs **[4]**

H04N 5/232 · · · Devices for controlling television cameras, e.g. remote control (**H04N 5/235** takes precedence; control of exposure in cameras by setting shutters, diaphragms or filters separately or conjointly **G03B 7/00**; focusing for cameras **G03B 13/00**; varying magnification for cameras **G03B 17/00**) **[4]** Dispositifs pour la commande des caméras de télévision, p.ex. commande à distance (**H04N 5/235** a priorité; réglage de la lumination dans les caméras par le réglage des obturateurs, des diaphragmes ou des filtres séparément ou conjointement **G03B 7/00**; mise au point pour **appareils** photographiques **G03B 13/00**; variation du grossissement dans les **appareils** photographiques **G03B 17/00**) **[4]**

H04N 5/235 · · · Circuitry for compensating for variation in the brightness of the object **[4]** Circuits pour la compensation des variations de la luminance de l'objet **[4]**

H04N 5/238 · · · · by influencing optical part of the camera **[4]** en agissant sur la partie optique de la caméra **[4]**

H04N 5/243 · · · · by influencing the picture signal **[4]** en agissant sur le signal d'image **[4]**

H04N 5/247 · · · **Arrangement of** television cameras **[4]** Disposition des caméras de télévision **[4]**

H04N 5/253 · · Picture signal generating by scanning motion picture films or slide opaques, e.g. for telecine (scanning details therefor **H04N 3/36**) **[4]** Signal d'image **produit** par balayage de films cinématographiques ou de diapositives, p.ex. pour le télécinéma (détails du balayage à cet effet **H04N 3/36**) **[4]**

H04N 5/257 · · Picture signal generators using flying-spot scanners (**H04N 5/253** takes precedence) **[4]** Générateurs de signaux d'image utilisant des analyseurs à spot mobile **H04N 5/253** a priorité) **[4]**

H04N 5/262 · · Studio circuits, e.g. for mixing, switching-over, change of character of image, other special effects **[4]** Circuits de studio, p.ex. pour mélanger, commuter, changer le caractère de l'image, pour d'autres effets spéciaux **[4]**

H04N 5/265 · · · Mixing **[4]** Mélange **[4]**

H04N 5/268 · · · Signal distribution or switching (for broadcasting **H04H 20/00**) **[4]** Distribution ou commutation du signal (pour radiodiffusion **H04H 20/00**) **[4]**

H04N 5/272 · · · Means for inserting a foreground image

in a background image, i.e. inlay, outlay **[4]** Moyens pour insérer une image de premier plan dans une image d'arrière plan, c. à d. incrustation, effet inverse **[4]**

H04N 5/275 · · · · Generation of keying signals **[4]** Génération de signaux de commutation **[4]**

H04N 5/278 · · · Subtitling **[4]** Sous-titrage **[4]**

H04N 5/28 · · Mobile studios Studios mobiles

H04N 5/30 · Transforming light or analogous information into electric information (**H04N 5/222** takes precedence; scanning details**H04N 3/00**; transforming acoustic waves into electric information **G01S 7/52**, **G01S 15/89**; light transforming elements **H01J**, **H01L**) **[2,4,7]** Transformation d'informations lumineuses ou analogues en informations électriques (**H04N 5/222** a priorité; détails de balayage **H04N 3/00**; transformation d'ondes acoustiques en informations électriques**G01S 7/52**, **G01S 15/89**; éléments transformateurs de lumière **H01J**, **H01L**) **[2,4,7]**

H04N 5/32 · · Transforming X-rays Transformation des rayons X

H04N 5/321 · · · with video transmission of fluoroscopic images **[5]** avec **transmission** vidéo d'images fluoroscopiques **[5]**

H04N 5/325 · · · · Image enhancement, e.g. by subtraction techniques using polyenergetic X-rays **[5]** Amélioration de l'image, p.ex. par des techniques soustractives utilisant des rayons X polyénergétiques **[5]**

H04N 5/33 · · Transforming infra-red radiation **[2]** Transformation des rayonnements infrarouges **[2]**

H04N 5/335 · · using electrically scanned solid-state devices (**H04N 5/32**, **H04N 5/33** take precedence) **[4]** utilisant des dispositifs à l'état solide balayés électriquement (**H04N 5/32**, **H04N 5/33** ont priorité) **[4]**

H04N 5/38 · Transmitter circuitry (**H04N 5/14** takes precedence) **[4]** Circuits d'émetteur (**H04N 5/14** a priorité) **[4]**

H04N 5/40 · · Modulation circuits Circuits de modulation

H04N 5/42 · · for transmitting at will black-and-white or colour signals pour la **transmission** à volonté de signaux en noir et blanc ou de signaux de couleur

H04N 5/44 · Receiver circuitry (**H04N 5/14** takes precedence) **[4]** Circuits de réception (**H04N 5/14** a priorité) **[4]**

H04N 5/445 · · for displaying additional information (**H04N 5/50** takes precedence) **[4]** pour visualisation d'information additionnelle (**H04N 5/50** a priorité) **[4]**

H04N 5/45 · · · Picture in picture **[4]** Image dans l'image **[4]**

H04N 5/455 · · Demodulation-circuits (demodulation in general **H03D**) **[4]** Circuits de démodulation (démodulation en général **H03D**) **[4]**

H04N 5/46 · · for receiving on more than one standard at will (deflecting circuits of multi-standard receivers**H04N 3/27**) **[4]** pour la réception à volonté de plus d'un type de norme d'émission (circuits de déviation pour récepteurs multinormes **H04N 3/27**) **[4]**

H04N 5/50 · · Tuning indicators; Automatic tuning control (tuning control in general **H03J**) **[4]** Indicateurs d'accord; Réglage automatique de l'accord (commande de l'accord de résonance en général **H03J**) **[4]**

H04N 5/52 · · Automatic gain control **[4]** Réglage automatique du gain **[4]**

H04N 5/53 · · · Keyed automatic gain control **[4]** Réglage automatique et verrouillé du gain **[4]**

H04N 5/54 · · · for positively-modulated picture signals (**H04N 5/53** takes precedence) **[4]** pour des signaux d'image à modulation positive (**H04N 5/53** a priorité) **[4]**

H04N 5/56 · · · for negatively-modulated picture signals (**H04N 5/53** takes precedence) **[4]** pour des signaux d'image à modulation négative (**H04N 5/53** a priorité) **[4]**

H04N 5/57 · · Control of contrast or brightness **[4]** Réglage du contraste ou de la luminance **[4]**

H04N 5/58 · · · in dependence upon ambient light **[4]** en fonction de la lumière ambiante **[4]**

H04N 5/59 · · · in dependence upon beam current of cathode ray tube **[4]** en fonction du courant de faisceau du tube à rayons cathodiques **[4]**

H04N 5/60 · · for the sound signals pour les signaux du canal son

H04N 5/62 · · · Intercarrier circuits, i.e. heterodyning sound and vision carriers Circuits interporteuse, c. à d. par battement hétérodyne des porteuses son et vision

Principal Directorate Patent Grant Automation - Directorate Classification		
Project: **A029**	Subject: Picture Signal Generation	IPC range: **H04N5**
Revision Concordance List		16 September 2009

old	**new**
H04N 3/15	**H04N 5/335 to H04N5/378**
H04N 5/217	**H04N 5/217, 5/357**
H04N 5/335	**H04N 5/335 to H04N5/378**

Principal Directorate Patent Grant Automation - Directorate Classification		
Project: A029	**Subject:** Solid State Image Sensors	**Subclass:** H04N
Scheme Proposal		**16 October 2009**

Ref: Annex 9, IB Working Group decision, 03-Aug-09

Regarding the questions raised in Annex 9, R offers the following remark regarding the title of subgroup H04N 5/341: the aspect of modifying the number of pixels having been sampled relate to a post-processing operation, such as combining pixels, whereas the aspect of modifying the number of pixels to be sampled relate to a partial read-out operation of the sensor.
R therefore proposes the following amendment:

H04N *5/341* · · · *Extracting pixel data from an image sensor by controlling scanning circuits, e.g. by modifying the number of pixels* **having been sampled or to be sampled**

This results in the following scheme proposal:

FROM H04N [Project-Rapporteur : A029/EP] <WG21>
ANNEX 18E

CL C *3/14* · · *by means of electrically scanned solid-state devices* ***(for picture generation H04N 5/335)***

CL D 3/15 (transferred to H04N 5/335)

CL C *5/217* · · · *in picture signal generation* ***(noise reduction or noise suppression involving solid-state image sensors H04N 5/357)***

CL C *5/335* · · *using solid-state image sensors [SSIS]* ***(H04N 5/32, H04N 5/33 take precedence)***

CL N ***Note***
5/335 *In this group, at each hierarchical level, in the absence of an indication to the contrary, classification is made in the first appropriate place. [new.]*

AL N *5/341* · · · ***Extracting pixel data from an image sensor by controlling scanning circuits, e.g. by modifying the number of pixels*** **having been sampled or to be sampled**

AL N *5/343* · · · · ***by switching between different modes of operation using different resolutions or aspect ratios, e.g. between still and video mode or between interlaced and non-interlaced mode***

AL N *5/345* · · · · ***by partially reading an SSIS array***

AL N *5/347* · · · · ***by combining or binning pixels in SSIS***

AL N *5/349* · · · · ***for increasing resolution by shifting the sensor relative to the scene***

AL N *5/351* · · · ***Control of the SSIS depending on the scene, e.g. brightness or motion in the scene***

AL N *5/353* · · · · ***Control of the integration time***

AL N *5/355* · · · · ***Control of the dynamic range***

AL N *5/357* · · · ***Noise processing, e.g. detecting, correcting, reducing or removing noise***

AL N *5/359* · · · · ***applied to excess charges produced by the exposure, e.g. smear, blooming, ghost image, crosstalk or leakage between pixels***

AL N *5/361* · · · · ***applied to dark current***

AL N *5/363* · · · · ***applied to reset noise, e.g. KTC noise***

AL N *5/365* · · · · ***applied to fixed-pattern noise, e.g. non-uniformity of response***

AL N *5/367* · · · · · ***applied to defects, e.g. non-responsive pixels***

AL N *5/369* · · · ***SSIS architecture; Circuitry associated therewith***

AL N *5/372* · · · · ***Charge-coupled device [CCD] sensors; Time delay and integration [TDI] registers or shift registers specially adapted for SSIS***

AL N *5/3722* · · · · · ***using frame interline transfer [FIT]***

AL N *5/3725* · · · · · ***using frame transfer [FT]***

AL N *5/3728* · · · · · ***using interline transfer [IT]***

AL N *5/374* · · · · ***Addressed sensors, e.g. MOS or CMOS sensors***

AL N *5/3745* · · · · · ***having additional components embedded within a pixel or connected to a group of pixels within a sensor matrix, e.g. memories, A/D converters, pixel amplifiers, shared circuits or shared components***

AL N *5/376* · · · · ***Addressing circuits***

AL N *5/378* · · · · ***Readout circuits, e.g. correlated double sampling [CDS] circuits, output amplifiers or A/D converters***

Thierry Bequet
Gilles Sindic
Ruben de Bekker

IPC/A 031
ORIGINAL: English/French
DATE: 12.11.2009

WORLD INTELLECTUAL PROPERTY ORGANIZATION
ORGANISATION MONDIALE DE LA PROPRIÉTÉ INTELLECTUELLE

GENEVA/GENÈVE

COMMITTEE OF EXPERTS OF THE IPC UNION
COMITÉ D'EXPERTS DE L'UNION DE L'IPC

AL REVISION PROJECT FILE
DOSSIER DE PROJET RÉVISION NIVEAU ÉLEVÉ

PROPOSAL BY : **WG** **PROPOSITION DE :**	**IPC AREA:** **H01J 11/00** **DOMAINE DE LA CIB :**
RAPPORTEUR : **EP**	**TECHNICAL FIELD :** **E** **DOMAINE TECHNIQUE :**

ANNEX/ ANNEXE	CONTENT/CONTENU		ORIGIN/ ORIGINE	DATE
1	Revision request with proposal	Demande de révision avec proposition	EP	27.05.2009
2	Rapporteur report	Rapport du rapporteur	EP	05.11.2009

REQUEST FOR REVISION OF THE IPC

Class(es) or Subclass(es): **H01J**

1. Demarcation of the area to be revised: **Alternate Current Plasma Display Panels (AC-PDP's) – IPC: H01J 11/00**

2. Reasons for the request:
   (a) Subdivision of IPC groups having an excessive file size and a high rate of growth of the PCT minimum documentation [ ]
   (b) Change of the classification structure where it has become inefficient for searching [X]
   (c) Clarification of wordings in order to improve consistency in classifying or to avoid overlap with other places of the IPC [ ]

Explanation of above:
The well-established technology of plasma display panels making use of alternate current (AC-PDP's) is presently hidden in the IPC and classified differently by Patent Offices. With the increasing number of incoming applications in the field, there is the need to reorganise this technical area and make it a harmonised area visible in the IPC.

3. For requests under 2(a), numerical data (PCT min. one document per family):

(a) File size:	[ ]		
(b) Rate of growth (applications filed in)		2004: [ ]	2005: [ ]
(c) Average size of new subgroups:		[ ]	
(d) Proposal tested ?	**YES** [ ]	**NO** [X]	

4. Detailed proposal:
   Submitted herewith [X]
   We are prepared to elaborate it [ ]
   We are not in a position to elaborate it [ ]

5. General outline, possible solutions, options, etc.:
Trilateral offices have long discussed the needs, scope and solutions of this revision project and agreed to review and expand the current group H01J 11/00.
The annexed detailed proposal is based on the final scheme agreement of Trilateral Harmony project **T077**.

Proposing Office: **EPO**

Date: 20 May 2009 Signature: Pierre Held / Roberto Iasevoli

Detailed Scheme Proposal

	H01J	
C	**11/00**	**Gas-filled discharge tubes with alternate current induction of the discharge, e.g. AC-PDP's [Plasma Display Panels] (circuits or methods for driving PDP's G09G 3/28); Gas-filled discharge tubes without any main electrode inside the vessel; Gas-filled discharge tubes with at least one main electrode outside the vessel** (discharge lamps H01J 65/00) **Note** In this group, the following term is used with the meaning indicated: – "main electrode" means any of a sustain, scan or address electrode.
D	11/02	*transferred to 11/00, 11/10-11/54*
D	11/04	*transferred to 11/00, 11/10-11/54*
N	11/10	• AC-PDP's with no main electrode in contact with the plasma
N	11/12	• • with main electrodes provided on both sides of the discharge space
N	11/14	• • with main electrodes provided only on one side of the discharge space
N	11/16	• • with main electrodes provided inside or on the side face of the spacers
N	11/18	• • containing a plurality of independent closed structures for containing the gas, e.g. plasma tubes, spheres, capsules or ampoules arrays
N	11/20	• Constructional details, e.g. electrodes, gas filling or vessels
N	11/22	• • Electrodes, e.g. special shape, material or configuration
N	11/24	• • • Sustain or scan electrodes
N	11/26	• • • Address electrodes
N	11/28	• • • Auxiliary electrodes, e.g. priming or trigger electrodes
N	11/30	• • • Floating electrodes
N	11/32	• • • Disposition of the electrodes
N	11/34	• • Vessels, containers or parts thereof, e.g. substrates
N	11/36	• • • Spacers, barriers, ribs, partitions or the like

N	11/38	• • • Dielectric or insulating layers
N	11/40	• • • Layers for protecting or enhancing the electron emission
N	11/42	• • • Fluorescent layers
N	11/44	• • Filters; Black matrix
N	11/46	• • Connecting or feeding means, e.g. leading-in conductors
N	11/48	• • Sealing, e.g. seals specially adapted for leading-in conductors
N	11/50	• • Filling, e.g. selection of gas mixture
N	11/52	• • Means for absorbing or adsorbing the gas mixture, e.g. by gettering
N	11/54	• • Means for exhausting the gas

Project A 031, Annex 02

Origin: EP , Date: 05.11.2009

Rapporteur report

Initial proposal of annex 1 was approved by US and JP (by remarks). No other comments were received. The proposal seems ready for adoption at the next WG meeting.

IPC/A 032
ORIGINAL: English/French
DATE: 19.11.2009

WORLD INTELLECTUAL PROPERTY ORGANIZATION
ORGANISATION MONDIALE DE LA PROPRIÉTÉ INTELLECTUELLE

GENEVA/GENÈVE

COMMITTEE OF EXPERTS OF THE IPC UNION
COMITÉ D'EXPERTS DE L'UNION DE L'IPC

AL REVISION PROJECT FILE
DOSSIER DE PROJET RÉVISION NIVEAU ÉLEVÉ

PROPOSAL BY : **WG** **PROPOSITION DE :**	**IPC AREA:** **G06Q** **DOMAINE DE LA CIB :**
RAPPORTEUR : **EP**	**TECHNICAL FIELD :** **E** **DOMAINE TECHNIQUE :**

ANNEX/ ANNEXE	CONTENT/CONTENU		ORIGIN/ ORIGINE	DATE
1	Revision request with proposal	Demande de révision avec proposition	EP	25.06.2009
2	Comments	Observations	CA	16.07.2009
3	Comments	Observations	DE	29.09.2009
4	Comments	Observations	JP	16.10.2009
5	Rapporteur report	Rapport du rapporteur	EP	16.11.2009
6	Proposal - scheme	Proposition - schéma	EP	16.11.2009
7	Comments	Observations	US	18.11.2009

REQUEST FOR REVISION OF THE IPC

Class(es) or Subclass(es): **G06Q**

1. Demarcation of the area to be revised: **Business Methods**

2. Reasons for the request:
   (a) Subdivision of IPC groups having an excessive file size and a high rate of growth of the PCT minimum documentation [X]
   (b) Change of the classification structure where it has become inefficient for searching [X]
   (c) Clarification of wordings in order to improve consistency in classifying or to avoid overlap with other places of the IPC [ ]

Explanation of above:
Business methods are classified under G06Q in IPC.
This area of IPC has been till now developed as a main-group structure only.
There is a long-waited wish of many patent offices to expand the current main-group structure into a finer and more detailed one.

3. For requests under 2(a), numerical data (PCT min. one document per family):

(a) File size:	[ ]		
(b) Rate of growth (applications filed in)		2004: [ ]	2005: [ ]
(c) Average size of new subgroups:		[ ]	
(d) Proposal tested ?	**YES** [ ]	**NO** [X]	

4. Detailed proposal:
   Submitted herewith [X]
   We are prepared to elaborate it [ ]
   We are not in a position to elaborate it [ ]

5. General outline, possible solutions, options, etc.:
Trilateral offices have long discussed the needs, scope and solutions of this revision project and agreed to review and expand the current main-group structure of G06Q.
The annexed detailed proposal is based on the final scheme agreement of Trilateral Harmony project **T002**.

Proposing Office: **EPO**

Date: 25 June 2009 Signature: Roberto Iasevoli

Detailed Scheme Proposal

	G06Q	
U	**Title**	**DATA PROCESSING SYSTEMS OR METHODS, SPECIALLY ADAPTED FOR ADMINISTRATIVE, COMMERCIAL, FINANCIAL, MANAGERIAL, SUPERVISORY OR FORECASTING PURPOSES;** **SYSTEMS OR METHODS SPECIALLY ADAPTED FOR ADMINISTRATIVE, COMMERCIAL, FINANCIAL, MANAGERIAL, SUPERVISORY OR FORECASTING PURPOSES, NOT OTHERWISE PROVIDED FOR**
U	**Notes**	**<u>Notes</u>** (1) Groups G06Q 10/00 to G06Q 50/00 and G06Q 99/00 only cover systems or methods that involve significant data processing operations, i.e. data processing operations that need to be carried out by a technological, e.g. computing, system or device. Group G06Q 90/00 covers systems or methods that do not involve significant data processing, when both of the following conditions are fulfilled: – the systems or methods are specially adapted for the purposes mentioned in the subclass title or the titles of groups G06Q 10/00 to G06Q 50/00; and – the systems or methods cannot be classified elsewhere in the IPC, for example by applying the principles described in paragraph 96 of the Guide. When classifying such systems or methods in group G06Q 90/00, additional classification may be made in the most closely related group of this or any other subclass, if this classification gives information about the application of the systems or methods that could be of interest for searching. Such non-obligatory classification must be given as "additional information". (2) When classifying in groups G06Q 10/00 to G06Q 40/00, systems or methods that are specially adapted for a specific business sector must also be classified in group G06Q 50/00, when the special adaptation is determined to be novel and non-obvious. (3) In this subclass, the first place priority rule is applied, i.e. at each hierarchical level, classification is made in the first appropriate place.
U	**10/00**	**Administration, e.g. office automation or reservations; Management, e.g. resource or project management**
N	10/02	• Reservations, e.g. for tickets, services or events
N	10/04	• Forecasting or optimization, e.g. linear programming, simulation, travelling salesman problem or stock cutting
N	10/06	• Resources, workflows, human or project management, e.g. organizing, planning, scheduling or allocating time, human or machine resources; Enterprise planning; Organisational models
N	10/08	• Logistics, e.g. for storage, shipping, distribution or loading; Inventory or stock management, e.g. order filling, procurement or balancing against orders
N	10/10	• Office automation, e.g. computer aided management of electronic mail or groupware (electronic mail network systems H04L 12/58; electronic mail protocols H04L 29/06); Time management, e.g. calendars, reminders, meetings or time accounting

U	**20/00**	**Payment schemes, architectures or protocols** (mechanisms actuated by objects other than coins, e.g. credit cards, to free or to actuate vending, hiring, coin or paper currency dispensing or refunding apparatus G07F 7/08; arrangements actuated by coded cards and adapted for dispensing or receiving monies or the like and posting such transactions to existing accounts, e.g. ATM [Automatic Teller Machines] G07F 19/00; electronic cash registers G07G 1/12)
N	20/02	• involving a neutral third party, e.g. certification authority, notary or trusted third party [TTP]
N	20/04	• characterised by the payment circuit
N	20/06	• • Private payment circuit, e.g. involving electronic currency used only among participants of a common payment scheme or inside a defined community, or money generated by private organizations
N	20/08	• characterised by the architecture used
N	20/10	• • Electronic funds transfer [EFT] systems; Home banking systems
N	20/12	• • Electronic shopping systems
N	20/14	• • Billing systems
N	20/16	• • Payments settled via telecommunications system
N	20/18	• • Payments for services accessed through systems involving a self-service terminal [SST], vending machines, kiosks or multimedia terminals
N	20/20	• • Point-of-sale [POS] network systems
N	20/22	• characterised by the payment model or scheme
N	20/24	• • Credit scheme, i.e. “pay after”
N	20/26	• • Debit scheme, i.e. “pay now”
N	20/28	• • Pre-payment scheme, i.e. “pay before”
N	20/30	• characterized by the use of specific devices, e.g. wireless devices, IC cards or magnetic cards
N	20/32	• • Wireless devices
N	20/34	• • Cards, e.g. IC card or magnetic cards
N	20/36	• • Electronic wallets or electronic money safes
N	20/38	• characterised by details of the protocol
N	20/40	• • Authorisation, e.g. identification of payer or payee, verification of customer or shop credentials; Review and approval of payers, e.g. check of credit lines or negative lists
N	20/42	• • Confirmation, e.g. check or permission by the legal debtor of payment
U	**30/00**	**Commerce, e.g. marketing, shopping, billing, auctions or e-commerce**
N	30/02	• Marketing, e.g. market research and analysis, surveying, promotions, advertising, buyer profiling, customer management or rewards; Price estimation or determination
N	30/04	• Billing; Invoicing, e.g. tax processing in connection with a sale
N	30/06	• Data processing in buying, selling or leasing transactions
N	30/08	• • for auctions

U	**40/00**	**Finance, e.g. banking, investment or tax processing; Insurance, e.g. risk analysis or pensions**
N	40/02	• Banking, e.g. interest calculation, credit approval, mortgages, home or on-line banking
N	40/04	• Exchange, e.g. stocks, commodities, derivatives or foreign exchange
N	40/06	• Investment, e.g. financial instruments, portfolio management or fund management
N	40/08	• Insurance, e.g. risk analysis or pensions
U	**50/00**	**Systems or methods specially adapted for a specific business sector, e.g. health care, utilities, tourism or legal services**
N	50/02	• Agriculture; Fishing; Mining
N	50/04	• Manufacturing
N	50/06	• Electricity, gas or water supply
N	50/08	• Construction
N	50/10	• Hotels or restaurants
N	50/12	• Transport, storage or communications
N	50/14	• • Logistics
N	50/16	• • Travel agencies
N	50/18	• • Post and telecommunications (franking apparatus G07B 17/00)
N	50/20	• Services
N	50/22	• • Real estate
N	50/24	• • Legal services; Handling legal documents
N	50/26	• • Education
N	50/28	• • Health care, e.g. hospitals; Social work
N	50/30	• • • Patient record management (processing of medical or biological data for scientific purposes G06F 19/00)
N	50/32	• • Governmental or public services
N	50/34	• Betting, e.g. betting on sport events; Bookmaking; Internet betting
U	**90/00**	**Systems or methods specially adapted for administrative, commercial, financial, managerial, supervisory or forecasting purposes, not involving significant data processing**
U	**99/00**	**Subject matter not provided for in other groups of this subclass**

U = Unchanged
N = New

The Canadian Intellectual Property Office CIPO OPIC L'Office de la propriété intellectuelle du Canada

Project Number	**: A032**
Class/Subclass	**: G06Q**
Date	**: July 13, 2009**

CA is pleased with the proposal of Annex 1 as it addresses many issues with regards to a rapidly increasing collection of documents in the business methods field. We would like to provide the following comments on its respective parts.

G06Q 20/10

The proposed sub-group is titled "Electronic fund transfer [EFT] systems; Home banking systems". CA sees possible confusion between the use of G06Q 20/10 and G06Q 40/02. To CA's knowledge, home banking related subject matter is presently classified G06Q 40/00. The definition statement of G06Q 40/00 further supports this. We therefore suggest removing "Home banking systems" from the title of G06Q 20/10. Otherwise, CA would appreciate a clarification as to what differentiates home banking in the proposed G06Q 20/10 from home banking in the proposed G06Q 40/02.

G06Q 20/12

It is unclear to CA exactly what type of subject matter is to be classified in this proposed "Electronic shopping systems" sub-group. The wording appears to relate to e-shopping or e-commerce yet these subjects are covered by G06Q 30/00. CA would appreciate an explanation on the matter.

G06Q 20/14

The proposed sub-group is titled "Billing systems". CA sees possible confusion between the use of G06Q 20/14 and G06Q 30/04. As we understand it, billing systems are presently classified G06Q 30/00. The definition statement of G06Q 30/00 further supports this. We thus suggest removing the proposed G06Q 20/14 sub-group since the intended subject matter seems fully covered by the proposed G06Q 30/04. Otherwise, CA would appreciate a clarification as to what differentiates billing systems in the proposed G06Q 20/14 from billing in the proposed G06Q 30/04.

Philippe Perras
Patent Classification Examiner

DEUTSCHES PATENT- UND MARKENAMT German Patent and Trade Mark Office	Class/Subcl.: **G06Q** Date: 28.09.2009
DE - Comments — A 032	

Re: Annex 1, 2

DE welcomes the initial scheme revision proposal of the EP Rapporteur for this subclass and provides the following comments:

1) DE supports completely the opinion and suggestions of CIPO in annex 2
2) In addition, our experts have the following remarks and suggestions to the scheme:

G06Q 10/04:
The definition of this subgroup needs to be specified more precisely; otherwise there is a risk that by example all kinds of simulations will be classified here.
Our proposal is:

> "Forecasting or optimization ***achieved by methods like*** linear programming, simulation, travelling salesman problem or stock cutting."

G06Q 10/08:
In our opinion this subgroup should be deleted, because logistics methods are already contained in G06Q 50/12 and G06Q 50/14. We worry that problems in differentiating between these G06Q 10/08 and G06Q 50/12 and 50/14 would arise.

G06Q 30/04:
The part of the title "tax processing in connection with a sale" should be removed, because otherwise there is a risk of confusion with subgroup G06Q 40/00.

G06Q 40/00:
Where should patent applications concerning "tax processing" be classified ?
An additional specific subgroup should be created.

G06Q 50/12, G06Q 50/14:
Transport and storage are areas of logistics, not the other way around.
Our proposal is:

> G06Q 50/12**: .** Logistics or communications
> G06Q 50/14**: . .** Transport, storage

G06Q 50/xx:
The subgroups G06Q 50/xx should comprise exclusively administrative, organisational, financial or commercial tasks. The currently proposed titles would lead to confusion, especially because the title of G06Q contains the wording "not otherwise provided for". Therefore an additional note or a more precise title of G06Q 50/00 is necessary, by example adding in the title of G06Q 50/00:

> "Systems or methods ***concerning administrative, organisational, financial or commercial tasks*** specially adapted for a specific business sector, e.g. health care, utilities, tourism or legal services"

3) Our experts suggest to include the following references:

G06Q 10/00:
G06Q 10/04 --> complex mathematical methods for these purposes: G06F 17/10 - G06F 17/18

G06Q 20/00:

G06Q 20/16 --> accounting & billing services for wireless communication networks H04W 4/24
G06Q 20/32 --> accounting & billing services for wireless communication networks H04W 4/24
G06Q 20/34 --> Cards / Record Carriers for these purposes: G06K 19/067; card use in telephones H04M 1/675

G06Q 50/00:
G06Q 50/04 --> machine control in manufacturing: G05B 19/00
G06Q 50/26 --> teaching equipment: G09B
reference to G06F 19/00 in G06Q 50/30 should be placed in G06Q 50/28, for G06F 19/00 is not restricted to *patient* data
G06Q 50/30 --> Database structure and information retrieval: G06F 17/30

Raluca Koch

JAPAN PATENT OFFICE

October 16, 2009

Project: A032 Subclass: G06Q

Comment

This is with reference to DE comment in Annex 3. JP can support most of the remarks and suggestions of DE experts. However, JP has different opinion about the following three cases.

1. G06Q 10/04

JP considers it better to retain the original title of only “Forecasting or optimization.” It would not be appropriate to add somewhat ambiguous phrase starting with “achieved by methods like …” in an IPC title as DE suggested. Instead of changing the title, JP may propose to either add some modifying words to the term “simulation” in e.g. or simply delete this term “simulation.”

2. G06Q 50/12, G06Q 50/14

JP would not consider that any amendment of the scheme is needed in connection with these subgroups. JP believes that the terms “transport” and “storage” include the systems for tourists or mails, and cover wider concept than “logistics”. There is no problem with hierarchical relations in the Scheme proposed by EP Rapporteur.

3. G06Q 50/xx

JP would consider that no change of title of G06Q 50/00 nor any addition of Note are necessary. Contrary to DE’s interpretation, the phrase of “not otherwise provided for” at the end of title of G06Q is binding the classifier to give classification in G06Q only when the classification cannot be given in any other place than in subclass G06Q.

Therefore, even if there were no mentioning of “administrative, organizational, financial or commercial tasks” in the title of G06Q 50/00, there should be no danger that other systems or methods than those applied for “ADMINISTRATIVE, COMMERCIAL, FINANCIAL, MANAGERIAL, SUPERVISORY OR FORECASTING PURPOSES” are classified in G06Q 50/00.

[END]

Principal Directorate Patent Grant Automation - Directorate Classification		
Project: **A032**	Subject: **Business methods**	IPC range: **G06Q**
Rapporteur Report		16 November 2009

Ref.: Annexes 1-4 of project file

An initial proposal with detailed scheme was submitted by EPO (A.01). Comments were sent by CA (A.02), DE (A0.3) and JP (A.04).
R also exchanged emails on all open issues with experts at USPTO, JPO and EPO.

Groups 10/00 & 50/00, and respective subgroups

DE suggested a re-wording for group 10/04, in relation to the use of the term "simulation", to prevent that all kinds of simulation would be classified here. JP counter-proposed to give better examples or to remove the term "simulation" from the e.g.-portion.

R supports JP idea to remove the term "simulation" from the title. EPO does not oppose either.

R submits the proposal as formulated by DE/JP/EPO.

N	10/04	• Forecasting or optimization, e.g. linear programming, ~~simulation,~~ travelling salesman problem or stock cutting

Moreover, DE asked for group 10/08 to be deleted, as it would overlap with groups 50/12 & 50/14.

JP replied that they see no need for change, but they would not oppose. JPO would also like to maintain the current groups 50/12 and 50/14.

EPO opposes to the removal of group 10/08.

Therefore, **R** feels that there is no room for a substantial change.

However **R** would like to recall that:

i. the whole of G06Q works with FPPR – see Note(3) after G06Q,
ii. the set of subgroups under 50/00 are meant to be used in a "matrix" ~ "orthogonal" way next to the classification allotted in groups 10/00 to 40/00 – see Note(2) after G06Q.

In view of the above, the following examples could help to clarify:

i. an invention dealing with Logistics on its own would be classified in 10/08 – it might get more classification symbols if there are other aspects of interest for search;
ii. an invention dealing with Invoicing would be classified in 30/04;
iii. an invention dealing with Invoicing specific for Logistics (e.g. whereby the invoice is attached to a package and updated according to events) will be classified in 30/04 and optionally/preferably in 50/14 as well.

This should help understanding how classification would work under G06Q.

having said that, at this occasion **R** would like to improve the titles of 10/08 and 50/12-50/14, as in the table that follows: this would help clarifying what Logistics is, and to show that there aspects of Transportation that do not fit under Logistics:

N	10/08	• Logistics, e.g. warehousing, loading, distribution or shipping; Inventory or stock management, e.g. order filling, procurement or balancing against orders
N	50/12	• Logistics, e.g. warehousing, loading, distribution or shipping
N	50/14	• Transportation; Communications
N	50/16	• • Travel agencies
N	50/18	• • Post and telecommunications (franking apparatus G07B 17/00)

Group 20/00 and subgroups

CA expressed some concern about the groups 20/10, 20/12 and 20/14, whose wording overlaps with groups 40/02, 30/00 and 30/04 respectively.

R would like to recall that the quoted subgroups of 20/00 are specific for "Payment architectures", whereas groups 30/00 and 40/00 relate to specific "commerce / finance sectors".

Once more, any confusion should be removed by the proper use and understanding of FPPR. For example,

- an invention dealing with a payment architecture **specially adapted for** billing systems, will be classified in 20/14;
- an invention dealing with billing on its own, e.g. a software allowing to nicely format a bill and email it to a customer, will be classified in 30/04.

R feels that there is no need for change. However, at this occasion **R** would like to improve the titles of some subgroups under 20/00, as in the table that follows:

M	20/00	Payment architectures, schemes or protocols ---
N	20/02	• involving a neutral third party, e.g. certification authority, notary or trusted third party [TTP]
N	20/04	• Payment circuits
N	20/06	• • Private payment circuits, e.g. involving electronic currency used only among participants of a common payment scheme or inside a defined community, or money generated by private organisations
N	20/08	• Payment architectures
N	20/10	• • specially adapted for electronic funds transfer [EFT] systems; specially adapted for home banking systems

N	20/12	• • specially adapted for electronic shopping systems
N	20/14	• • specially adapted for billing systems
N	20/16	• • Payments settled via telecommunication systems
N	20/18	• • ~~Payments for services accessed through systems~~ involving self-service terminals [SSTs], vending machines, kiosks or multimedia terminals
N	20/20	• • Point-of-sale [POS] network systems
N	20/22	• Payment schemes or models
N	20/24	• • Credit schemes, i.e. "pay after"
N	20/26	• • Debit schemes, i.e. "pay now"
N	20/28	• • Pre-payment schemes, i.e. "pay before"
N	20/30	• characterised by the use of specific devices, e.g. wireless devices, IC cards or magnetic cards
N	20/32	• • Wireless devices
N	20/34	• • Cards, e.g. IC cards or magnetic cards
N	20/36	• • Electronic wallets or electronic money safes
N	20/38	• Payment protocols; Details thereof
N	20/40	• • Authorisation, e.g. identification of payer or payee, verification of customer or shop credentials; Review and approval of payers, e.g. check of credit lines or negative lists
N	20/42	• • Confirmation, e.g. check or permission by the legal debtor of payment

<u>Group 30/00 & 40/00, and respective subgroups</u>

DE asked the example portion of 30/04, "e.g. tax processing in connection with a sale" to be removed, because otherwise there is a risk of confusion with 40/00.

USPTO asked for a specific entry to be made for "tax strategies".

R would like to recall that:

- group 30/04 is meant for aspects of calculation of tax in relation to a sale: think of value added tax (VAT), or goods and service tax (GST);
- group 40/00 is instead meant for processing of <u>income</u> tax or the like.

DE also asked, in relation to group 40/00, where patent applications concerning "tax processing" should be classified.

The answer has been outlined above: (income) tax processing would be classified in the main group 40/00 – the Trilateral partners agreed in the Harmony phase that a specific subgroup would not be needed for lack of substantial population.

R suggests to slightly amend the titles of the concerned groups to make a clearer difference between tax-processing related to sales and tax-processing related to income or tax strategies:

N	30/04	• Billing or invoicing, e.g. processing of taxes related to a sale
		as an alternative, the example portion of 30/04 could be removed completely
M	**40/00**	**Finance, e.g. banking, investment; Insurance, e.g. risk analysis or pensions; Tax strategies; Processing of corporate or income taxes**

References

Finally DE suggested a number of references to be added — to the scheme?

R looked at the proposed references, but they all seem to be Informative- or Application-type and therefore would not fit in the scheme, but rather in the Definition.

The scheme needs not to be modified in that regard, till counter advise of other offices.

Next steps

The new scheme proposal looks quite consolidated. There is a good chance to have it approved as a whole before/during next WG meeting in Geneva.

Some offices could still have comments or issues though. If so, **R** asks to formulate these comments clearly pointing to the specific (main) group(s)

By doing so, further discussion could be narrowed to the issues of specific (main) group(s) only, while leaving the rest of the scheme ready for approval.

Roberto Iasevoli

Principal Directorate Patent Grant Automation - Directorate Classification		
Project: **A032**	Subject: **Business methods**	IPC: **G06Q**
Scheme Proposal		16 November 2009

U = Unchanged , N = New, M = Maintenance (=> no reclassification)

	G06Q	
U	**Title**	**DATA PROCESSING SYSTEMS OR METHODS, SPECIALLY ADAPTED FOR ADMINISTRATIVE, COMMERCIAL, FINANCIAL, MANAGERIAL, SUPERVISORY OR FORECASTING PURPOSES;** **SYSTEMS OR METHODS SPECIALLY ADAPTED FOR ADMINISTRATIVE, COMMERCIAL, FINANCIAL, MANAGERIAL, SUPERVISORY OR FORECASTING PURPOSES, NOT OTHERWISE PROVIDED FOR**
U	**Notes**	**<u>Notes</u>** (1) Groups G06Q 10/00 to G06Q 50/00 and G06Q 99/00 only cover systems or methods that involve significant data processing operations, i.e. data processing operations that need to be carried out by a technological, e.g. computing, system or device. Group G06Q 90/00 covers systems or methods that do not involve significant data processing, when both of the following conditions are fulfilled: – the systems or methods are specially adapted for the purposes mentioned in the subclass title or the titles of groups G06Q 10/00 to G06Q 50/00; and – the systems or methods cannot be classified elsewhere in the IPC, for example by applying the principles described in paragraph 96 of the Guide. When classifying such systems or methods in group G06Q 90/00, additional classification may be made in the most closely related group of this or any other subclass, if this classification gives information about the application of the systems or methods that could be of interest for searching. Such non-obligatory classification must be given as "additional information". (2) When classifying in groups G06Q 10/00 to G06Q 40/00, systems or methods that are specially adapted for a specific business sector must also be classified in group G06Q 50/00, when the special adaptation is determined to be novel and non-obvious. (3) In this subclass, the first place priority rule is applied, i.e. at each hierarchical level, classification is made in the first appropriate place.

U	**10/00**	**Administration, e.g. office automation or reservations; Management, e.g. resource or project management**
N	10/02	• Reservations, e.g. for tickets, services or events
N	10/04	• Forecasting or optimization, e.g. linear programming, travelling salesman problem or stock cutting
N	10/06	• Resources, workflows, human or project management, e.g. organizing, planning, scheduling or allocating time, human or machine resources; Enterprise planning; Organisational models
N	10/08	• Logistics, e.g. warehousing, loading, distribution or shipping; Inventory or stock management, e.g. order filling, procurement or balancing against orders
N	10/10	• Office automation, e.g. computer aided management of electronic mail or groupware (electronic mail network systems H04L 12/58; electronic mail protocols H04L 29/06); Time management, e.g. calendars, reminders, meetings or time accounting

M	**20/00**	**Payment architectures, schemes or protocols (---**
N	20/02	• involving a neutral third party, e.g. certification authority, notary or trusted third party [TTP]
N	20/04	• Payment circuits
N	20/06	• • Private payment circuits, e.g. involving electronic currency used only among participants of a common payment scheme or inside a defined community, or money generated by private organisations
N	20/08	• Payment architectures
N	20/10	• • specially adapted for electronic funds transfer [EFT] systems; specially adapted for home banking systems
N	20/12	• • specially adapted for electronic shopping systems
N	20/14	• • specially adapted for billing systems
N	20/16	• • Payments settled via telecommunication systems
N	20/18	• • involving self-service terminals [SSTs], vending machines, kiosks or multimedia terminals
N	20/20	• • Point-of-sale [POS] network systems
N	20/22	• Payment schemes or models
N	20/24	• • Credit schemes, i.e. “pay after”
N	20/26	• • Debit schemes, i.e. “pay now”
N	20/28	• • Pre-payment schemes, i.e. “pay before”
N	20/30	• characterised by the use of specific devices, e.g. wireless devices, IC cards or magnetic cards
N	20/32	• • Wireless devices
N	20/34	• • Cards, e.g. IC cards or magnetic cards
N	20/36	• • Electronic wallets or electronic money safes
N	20/38	• Payment protocols; Details thereof
N	20/40	• • Authorisation, e.g. identification of payer or payee, verification of customer or shop credentials; Review and approval of payers, e.g. check of credit lines or negative lists
N	20/42	• • Confirmation, e.g. check or permission by the legal debtor of payment

U	**30/00**	**Commerce, e.g. marketing, shopping, billing, auctions or e-commerce**
N	30/02	• Marketing, e.g. market research and analysis, surveying, promotions, advertising, buyer profiling, customer management or rewards; Price estimation or determination
N	30/04	• Billing or invoicing, e.g. processing of taxes related to a sale
N	30/06	• Data processing in buying, selling or leasing transactions
N	30/08	• • for auctions
M	**40/00**	**Finance, e.g. banking, investment; Insurance, e.g. risk analysis or pensions; Tax strategies; Processing of corporate or income taxes**
N	40/02	• Banking, e.g. interest calculation, credit approval, mortgages, home or on-line banking
N	40/04	• Exchange, e.g. stocks, commodities, derivatives or foreign exchange
N	40/06	• Investment, e.g. financial instruments, portfolio management or fund management
N	40/08	• Insurance, e.g. risk analysis or pensions

U	**50/00**	**Systems or methods specially adapted for a specific business sector, e.g. health care, utilities, tourism or legal services**
N	50/02	• Agriculture; Fishing; Mining
N	50/04	• Manufacturing
N	50/06	• Electricity, gas or water supply
N	50/08	• Construction
N	50/10	• Hotels or restaurants
N	50/12	• Logistics, e.g. warehousing, loading, distribution or shipping
N	50/14	• Transportation; Communications
N	50/16	• • Travel agencies
N	50/18	• • Post and telecommunications (franking apparatus G07B 17/00)
N	50/20	• Services
N	50/22	• • Real estate
N	50/24	• • Legal services; Handling legal documents
N	50/26	• • Education
N	50/28	• • Health care, e.g. hospitals; Social work
N	50/30	• • • Patient record management (processing of medical or biological data for scientific purposes G06F 19/00)
N	50/32	• • Governmental or public services
N	50/34	• Betting, e.g. betting on sport events; Bookmaking; Internet betting
U	**90/00**	**Systems or methods specially adapted for administrative, commercial, financial, managerial, supervisory or forecasting purposes, not involving significant data processing**
U	**99/00**	**Subject matter not provided for in other groups of this subclass**

United States Patent and Trademark Office	
Topic: Project A032 Subclass G06Q	**Date: 19 November 2009**

Comments

US thanks R for the report and proposal in Annexes 5 and 6 respectively.

US is appreciate of the inclusion of “tax strategies” in the scheme, this is becoming an increasingly important area for the US.

US further believes that prior to adoption of the scheme, definitions should be provided at the appropriate level due to similar terminology used throughout the scheme, e.g. payment architectures, payment protocols, payment circuits , and payment schemes

IPC/C 447
ORIGINAL: English/French
DATE: 25.11.2009

WORLD INTELLECTUAL PROPERTY ORGANIZATION
ORGANISATION MONDIALE DE LA PROPRIÉTÉ INTELLECTUELLE

GENEVA/GENÈVE

COMMITTEE OF EXPERTS OF THE IPC UNION
COMITÉ D'EXPERTS DE L'UNION DE L'IPC

CL REVISION PROJECT FILE
DOSSIER DE PROJET RÉVISION NIVEAU DE BASE

PROPOSAL BY : **WG** **PROPOSITION DE :**	**IPC AREA:** **G07D** **DOMAINE DE LA CIB :**
RAPPORTEUR : **EP**	**TECHNICAL FIELD :** **E** **DOMAINE TECHNIQUE :**

ANNEX/ ANNEXE	CONTENT/CONTENU		ORIGIN/ ORIGINE	DATE
1	Working Group decision	Décision du groupe de travail	IB	21.12.2006
2	Confirmation byTOs on reclassification		JP	05.01.2007
3	Comments	Observations	US	11.01.2007
4	Confirmation byTOs on reclassification		EP	16.01.2007
5	Working Group decision	Décision du groupe de travail	IB	11.07.2007
6	Rapporteur report	Rapport du rapporteur	EP	12.11.2007
7	Rapporteur proposal	Proposition du rapporteur	EP	12.11.2007
8	Comments	Observations	US	15.11.2007
9	Comments	Observations	JP	20.11.2007
10	Rapporteur report	Rapport du rapporteur	EP	13.12.2007
11	Rapporteur proposal	Proposition du rapporteur	EP	13.12.2007
12	Comments	Observations	JP	19.12.2007
13	Working Group decision	Décision du groupe de travail	IB	14.01.2008
14	Rapporteur report	Rapport du rapporteur	EP	07.05.2008
15	Comments	Observations	DE	03.06.2008
16	Working Group decision	Décision du groupe de travail	IB	26.06.2008

ANNEX/ ANNEXE	CONTENT/CONTENU		ORIGIN/ ORIGINE	DATE
17	Comments	Observations	SE	02.09.2008
18	Comments	Observations	EP	10.10.2008
19	Rapporteur report	Rapport du rapporteur	EP	17.10.2008
20	Rapporteur proposal	Proposition du rapporteur	EP	17.10.2008
21	Comments	Observations	RO	17.10.2008
22	Comments	Observations	US	20.11.2008
23	Working Group decision	Décision du groupe de travail	IB	07.01.2009
24	Comments	Observations	JP	30.01.2009
25	French version	Version française	EP	16.02.2009
26	Rapporteur report	Rapport du rapporteur	EP	03.06.2009
27	Comprehensive Amendments - English Version		IB	29.06.2009
28	French version	Version française	EP	20.07.2009
29	Working Group decision	Décision du groupe de travail	IB	03.08.2009
30	Rapporteur report	Rapport du rapporteur	EP	06.10.2009
31	French version	Version française	FR	25.11.2009

WORLD INTELLECTUAL PROPERTY ORGANIZATION	
Project: **C 447**	**Date: June 29, 2009**

At WG/21, the IB was requested to prepare a comprehensive English version of approved amendments for the French translation.

Comprehensive Approved English Version (WG19 & WG 20)

Project C 447 (G07D)

EN: approve CL , M	**Title**	**HANDLING OF COINS OR OF PAPER CURRENCY OR SIMILAR VALUABLE PAPERS, e.g. TESTING, SORTING BY DENOMINATIONS, COUNTING, DISPENSING, CHANGING OR DEPOSITING**
EN: approve CL , M	Note G07D	In this subclass, the following terms or expressions are used with the meaning indicated: • "coins" also covers tokens of similar nature; • *"paper currency or similar valuable papers" covers banknotes, bills, cheques, vouchers, securities, bonds or the like.* **[new.]**
EN: approve CL , M	**1/00**	**Coin dispensers**
EN: approve CL , M	1/02	· giving change
EN: approve CL , M	**3/00**	**Sorting a mixed bulk of coins into denominations**
EN: approve AL , M	3/02	· Sorting coins by means of graded apertures
EN: approve AL , M	3/12	· Sorting coins by means of stepped deflectors
EN: approve AL , M	3/14	· Apparatus driven under control of coin-sensing elements

EN: approve AL , M	3/16	· in combination with coin-counting
EN: approve CL , M	**5/00**	**Testing specially adapted to determine the identity or genuineness of coins, e.g. for segregating coins which are unacceptable or alien to a currency**
EN: approve CL , M	**7/00**	**Testing specially adapted to determine the identity or genuineness of paper currency or similar valuable papers, e.g. for segregating those which are unacceptable or alien to a currency**
EN: approve CL , M	**9/00**	**Counting coins** (in combination with coin-sorting **G07D 3/16**) **; Handling of coins not provided for in the other groups of this subclass**
EN: approve CL , M	9/04	· Hand- or motor-driven devices for counting coins
EN: approve CL , M	**11/00**	**Devices accepting coins or paper currency, e.g. depositing machines** (apparatus freed or actuated by coins or the like **G07F**; apparatus freed or actuated by paper currency **G07F 7/04**; complete banking systems **G07F 19/00**)
EN: approve CL , M	**13/00**	**Handling of coins or of paper currency or similar valuable papers, characterised by a combination of mechanisms not covered by a single one of groups G07D 1/00-G07D 11/00**

Principal Directorate Patent Grant Automation - Directorate Classification		
Project: **C447**	Subject: H**andling of coins ...**	IPC range: **G07D**
French Version		20 July 2009

Ref: Annex 27
Subj.: French version of the Comprehensive Approved English Version (A. 27 = WG19 & WG 20)

EN: approve CL , M	**Title**	**HANDLING OF COINS OR OF PAPER CURRENCY OR SIMILAR VALUABLE PAPERS, e.g. TESTING, SORTING BY DENOMINATIONS, COUNTING, DISPENSING, CHANGING OR DEPOSITING**	**MANIPULATION DE PIECES DE MONNAIE, DE PAPIER-MONNAIE OU DE PAPIERS DE VALEUR ANALOGUES, p.ex. VERIFICATION, TRI PAR VALEURS, COMPTAGE, DISTRIBUTION, CHANGE OU DEPOT**
EN: approve CL , M	**Note G07D**	In this subclass, the following terms or expressions are used with the meaning indicated: • "coins" also covers tokens of similar nature; • *"paper currency or similar valuable papers" covers banknotes, bills, cheques, vouchers, securities, bonds or the like.* **[new.]**	Dans la présente sous-classe, les termes ou expressions suivants ont la signification ci-dessous indiquée : – "pièces de monnaie" couvre également les jetons de nature similaire ; – "papier-monnaie ou papiers de valeur analogues" couvre les billets de banque, les effets de commerce, les chèques, les documents commerciaux, les titres, les bons ou analogues.
EN: approve CL , M	**1/00**	**Coin dispensers**	**Distributeurs de pièces de monnaie**
EN: approve CL , M	1/02	· giving change	• faisant de la monnaie
EN: approve CL , M	**3/00**	**Sorting a mixed bulk of coins into denominations**	**Tri, selon leur valeur, de pièces de monnaie en vrac**
EN: approve AL , M	3/02	· Sorting coins by means of graded apertures	• Tri de pièces de monnaie au moyen d'orifices calibrés
EN: approve AL , M	3/12	· Sorting coins by means of stepped deflectors	• Tri de pièces de monnaie au moyen de déflecteurs échelonnés
EN: approve AL , M	3/14	· Apparatus driven under control of coin-sensing elements	• Appareils mus sous l'action d'éléments détectant les pièces de monnaie
EN: approve AL , M	3/16	· in combination with coin-counting	• combiné au comptage de pièces de monnaie
EN:	**5/00**	**Testing specially adapted to determine the**	**Vérification spécialement adaptée à la**

approve CL , M		**identity or genuineness of coins, e.g. for segregating coins which are unacceptable or alien to a currency**	**détermination de l'identité ou de l'authenticité des pièces de monnaie, p.ex. pour séparer les pièces qui sont inacceptables ou en monnaie étrangère**
EN: approve CL , M	**7/00**	**Testing specially adapted to determine the identity or genuineness of paper currency or similar valuable papers, e.g. for segregating those which are unacceptable or alien to a currency**	**Vérification spécialement adaptée à la détermination de l'identité ou de l'authenticité de papier-monnaie ou de papiers de valeur analogues, p.ex. pour séparer ceux qui sont inacceptables ou en monnaie étrangère**
EN: approve CL , M	**9/00**	**Counting coins** (in combination with coin-sorting **G07D 3/16**) **; Handling of coins not provided for in the other groups of this subclass**	**Comptage de pièces de monnaie** (combiné au tri de pièces G07D 3/16) **; Manipulation de pièces de monnaie non prévue dans les autres groupes de la présente sous-classe**
EN: approve CL , M	9/04	· Hand- or motor-driven devices for counting coins	• Dispositifs, mus à la main ou par moteur *[alternative: manuels ou motorisés]*, pour compter des pièces de monnaie
EN: approve CL , M	**11/00**	**Devices accepting coins or paper currency, e.g. depositing machines** (apparatus freed or actuated by coins or the like **G07F**; apparatus freed or actuated by paper currency **G07F 7/04**; complete banking systems **G07F 19/00**)	**Dispositifs acceptant des pièces de monnaie ou du papier-monnaie, p. ex. machines de dépôt** (appareils débloqués ou déclenchés par des pièces de monnaie ou appareils similaires G07F ; appareils débloqués ou déclenchés par du papier-monnaie G07F 7/04 ; systèmes bancaires complets G07F 19/00)
EN: approve CL , M	**13/00**	**Handling of coins or of paper currency or similar valuable papers, characterised by a combination of mechanisms not covered by a single one of groups G07D 1/00-G07D 11/00**	**Manipulation de pièces de monnaie, de papier-monnaie ou de papiers de valeur analogues, caractérisée par une combinaison de mécanismes non couverts par un seul des groupes G07D 1/00-G07D 11/00**

EXCERPT FROM DOCUMENT IPC/WG/21/2
EXTRAIT DU DOCUMENT IPC/WG/21/2

REPORT ON THE SEVENTH SESSION OF THE IPC ADVANCED LEVEL SUBCOMMITTEE

17. Since the seventh session of the ALS was the final one, all pending A projects were included in the program of the Working Group. From now on, A projects will designate revision projects originating from the IP5 Offices and C projects will designate revision projects that would be included in the IPC revision program by the Committee. For practical reasons, the schemes adopted by the ALS in the framework of projects A 012, A 013, A 014, A 017, A 018 and A 020 were included in the Technical Annexes of this session (see Technical Annexes 1 to 7 and 9 to this report).

IPC REVISION PROGRAM

General

25. The Working Group noted the decision by the Committee of Experts at its forty-first session that revision projects, including advanced level revision projects, would be considered by the Working Group and forwarded to the Committee for final adoption after completion. It was noted that projects originating from the Trilateral or the IP5 Offices cooperation will be designated by the letter “A” and revision projects included in the IPC revision program by the Committee will be designated by the letter “C” (see paragraph 17, above).

26. Discussions were based on compilations of the relevant revision project files. The Working Group considered nine pending C projects, plus 17 A projects forwarded from the former ALS, and approved amendments relating to those projects (see Technical Annexes 1 to 29 to this report relating to revision projects). The status of those projects and the list of future actions and deadlines are indicated in Annex III to this report.

IPC Revision Projects

27. The Working Group made the following observations with respect to the IPC revision projects. All references to annexes in this paragraph refer to annexes of the corresponding project file, unless otherwise stated.

Project C 447 (electrical) – The Working Group noted that no comments had been received since last session and decided to suspend further consideration of this project. It was agreed that no residual main group was needed in subclass G07D.

The International Bureau was invited to prepare a comprehensive English version of all approved amendments in order to facilitate the preparation of a new French version for consideration at the next session of the Working Group.

RAPPORT SUR LA SEPTIÈME SESSION DU SOUS-COMITÉ CHARGÉ DU NIVEAU ÉLEVÉ DE LA CIB

17. Étant donné que la septième session de l'ALS était la dernière, tous les projets A en instance ont été inscrits au programme du groupe du travail. Dorénavant, les projets A désigneront les projets de révision émanant des offices de l'IP5 et les projets C désigneront les projets de révision qui seront inscrits au programme de révision de la CIB par le comité. Pour des raisons pratiques, les schémas adoptés par l'ALS dans le cadre des projets A 012, A 013, A 014, A 017, A 018 et A 020 ont été inclus dans les annexes techniques du rapport sur la session en cours (voir les annexes techniques 1 à 7 et 9 du présent rapport).

PROGRAMME DE RÉVISION DE LA CIB

Généralités

25. Le groupe de travail a pris note de la décision prise par le comité d'experts à sa quarante et unième session selon laquelle les projets de révision, y compris ceux relatifs au niveau élevé, seront examinés par le groupe de travail et transmis au comité pour adoption définitive une fois achevés. Il a été pris note du fait que les projets émanant des offices de la coopération trilatérale ou de l'IP5 seraient désignés par la lettre "A" et que les projets de révision inscrits au programme de révision de la CIB par le comité seraient désignés par la lettre "C" (voir le paragraphe 17).

26. Les délibérations ont eu lieu sur la base de synthèses des dossiers de projet correspondants. Le groupe de travail a examiné neuf projets C en instance ainsi que 17 projets A transmis par l'ancien ALS et a approuvé les modifications relatives à ces projets (voir les annexes techniques 1 à 29 du présent rapport relatives aux projets de révision). L'état d'avancement de ces projets et la liste des mesures à prendre et des délais correspondants font l'objet de l'annexe III du présent rapport.

Projets de révision de la CIB

27. Le groupe de travail a formulé les observations ci-après concernant les projets de révision de la CIB. Dans le présent paragraphe, tout renvoi à des annexes désigne, sauf indication contraire, les annexes du dossier de projet correspondant.

Projet C 447 (électricité) – Le groupe de travail a pris note du fait qu'aucune observation n'avait été reçue depuis la dernière session et a décidé de suspendre l'examen de ce projet. Il a été convenu qu'aucun groupe principal résiduel n'était nécessaire dans la sous-classe G07D.

Le Bureau international a été invité à établir une version anglaise complète de toutes les modifications approuvées afin de faciliter l'établissement d'une nouvelle version française pour examen par le groupe de travail à sa prochaine session.

Projet: **C447**	Manipulation des pièces de monnaie	**G07D**
Observations FR sur la version française		Novembre 2009

Ref: Annex 27
Subj.: French version of the Comprehensive Approved English Version (A. 27 = WG19 & WG 20)

EN: approve CL , M	**Title**	**HANDLING OF COINS OR OF PAPER CURRENCY OR SIMILAR VALUABLE PAPERS, e.g. TESTING, SORTING BY DENOMINATIONS, COUNTING, DISPENSING, CHANGING OR DEPOSITING**	**MANIPULATION DE PIECES DE MONNAIE, DE PAPIER-MONNAIE OU DE PAPIERS DE VALEUR ANALOGUES, p.ex. VERIFICATION, TRI PAR VALEURS, COMPTAGE, DISTRIBUTION, CHANGE OU DEPOT**
EN: approve CL , M	**Note G07D**	In this subclass, the following terms or expressions are used with the meaning indicated: • "coins" also covers tokens of similar nature; • *"paper currency or similar valuable papers" covers banknotes, bills, cheques, vouchers, securities, bonds or the like.* **[new.]**	Dans la présente sous-classe, les termes ou expressions suivants ont la signification ci-dessous indiquée : – "pièces de monnaie" couvre également les jetons de nature similaire ; – "papier-monnaie ou papiers de valeur analogues" couvre les billets de banque, les effets de commerce, les chèques, les documents commerciaux, les titres, les bons ou analogues.
EN: approve CL , M	**1/00**	**Coin dispensers**	**Distributeurs de pièces de monnaie**
EN: approve CL , M	1/02	· giving change	• faisant de la monnaie
EN: approve CL , M	**3/00**	**Sorting a mixed bulk of coins into denominations**	**Tri, selon leur valeur, de pièces de monnaie en vrac**
EN: approve AL , M	3/02	· Sorting coins by means of graded apertures	• Tri de pièces de monnaie au moyen d'orifices calibrés
EN: approve AL , M	3/12	· Sorting coins by means of stepped deflectors	• Tri de pièces de monnaie au moyen de déflecteurs échelonnés
EN: approve AL , M	3/14	· Apparatus driven under control of coin-sensing elements	• Appareils mus sous l'action d'éléments détectant les pièces de monnaie
EN: approve AL , M	3/16	· in combination with coin-counting	• combiné au comptage de pièces de monnaie
EN:	**5/00**	**Testing specially adapted to determine the**	**Vérification spécialement adaptée à la**

approve CL , M		**identity or genuineness of coins, e.g. for segregating coins which are unacceptable or alien to a currency**	**détermination de l'identité ou de l'authenticité des pièces de monnaie, p.ex. pour séparer les pièces qui ~~sont inacceptables~~ne peuvent être acceptées ou qui sont en monnaie étrangère**
EN: approve CL , M	**7/00**	**Testing specially adapted to determine the identity or genuineness of paper currency or similar valuable papers, e.g. for segregating those which are unacceptable or alien to a currency**	**Vérification spécialement adaptée à la détermination de l'identité ou de l'authenticité de papier-monnaie ou de papiers de valeur analogues, p.ex. pour séparer ceux qui ~~sont inacceptables~~ne peuvent être acceptés ou qui sont en monnaie étrangère**
EN: approve CL , M	**9/00**	**Counting coins** (in combination with coin-sorting **G07D 3/16**) **; Handling of coins not provided for in the other groups of this subclass**	**Comptage de pièces de monnaie** (combiné au tri de pièces G07D 3/16) **; Manipulation de pièces de monnaie non prévue dans les autres groupes de la présente sous-classe**
EN: approve CL , M	9/04	· Hand- or motor-driven devices for counting coins	• Dispositifs, ~~mus à la main ou par moteur [alternative: manuels ou motorisés]~~, pour compter des pièces de monnaie
EN: approve CL , M	**11/00**	**Devices accepting coins or paper currency, e.g. depositing machines** (apparatus freed or actuated by coins or the like **G07F**; apparatus freed or actuated by paper currency **G07F 7/04**; complete banking systems **G07F 19/00**)	**Dispositifs acceptant des pièces de monnaie ou du papier-monnaie, p. ex. machines de dépôt** (appareils débloqués ou déclenchés par des pièces de monnaie ou appareils similaires G07F ; appareils débloqués ou déclenchés par du papier-monnaie G07F 7/04 ; systèmes bancaires complets G07F 19/00)
EN: approve CL , M	**13/00**	**Handling of coins or of paper currency or similar valuable papers, characterised by a combination of mechanisms not covered by a single one of groups G07D 1/00-G07D 11/00**	**Manipulation de pièces de monnaie, de papier-monnaie ou de papiers de valeur analogues, caractérisée par une combinaison de mécanismes non couverts par un seul des groupes G07D 1/00~~-~~ à G07D 11/00**

Formatted: French France

IPC/C 449
ORIGINAL: English/French
DATE: 12.11.2009

WORLD INTELLECTUAL PROPERTY ORGANIZATION
ORGANISATION MONDIALE DE LA PROPRIÉTÉ INTELLECTUELLE

GENEVA/GENÈVE

COMMITTEE OF EXPERTS OF THE IPC UNION
COMITÉ D'EXPERTS DE L'UNION DE L'IPC

CL REVISION PROJECT FILE
DOSSIER DE PROJET RÉVISION NIVEAU DE BASE

PROPOSAL BY : **PROPOSITION DE :**	**IPC AREA:** **DOMAINE DE LA CIB :** **G07B, G08G**
RAPPORTEUR : **GB**	**TECHNICAL FIELD :** **DOMAINE TECHNIQUE :** **E**

ANNEX/ ANNEXE	CONTENT/CONTENU		ORIGIN/ ORIGINE	DATE
1	Working Group decision	Décision du groupe de travail	IB	10.07.2007
2	Comments	Observations	US	15.08.2007
3	Document-examples	Exemples de documents	JP	27.08.2007
4	Document-examples	Exemples de documents	GB	28.08.2007
5	Comments	Observations	JP	12.09.2007
6	Comments	Observations	FR	18.09.2007
7	Rapporteur report	Rapport du rapporteur	GB	10.10.2007
8	Comments	Observations	JP	30.10.2007
9	Comments	Observations	EP	08.11.2007
10	Comments	Observations	BR	12.11.2007
11	Rapporteur report	Rapport du rapporteur	GB	19.11.2007
12	Comments	Observations	JP	21.11.2007
13	Working Group decision	Décision du groupe de travail	IB	14.01.2008
14	Comments	Observations	DE	28.03.2008
15	Comments	Observations	EP	28.03.2008
16	Comments	Observations	US	02.04.2008
17	Comments	Observations	SE	07.04.2008

ANNEX/ ANNEXE	CONTENT/CONTENU		ORIGIN/ ORIGINE	DATE
18	Rapporteur proposal	Proposition du rapporteur	GB	24.04.2008
19	Comments	Observations	DE	19.05.2008
20	Comments	Observations	US	21.05.2008
21	French version	Version française	FR	22.05.2008
22	Working Group decision	Décision du groupe de travail	IB	26.06.2008
23	Comments	Observations	DE	12.09.2008
24	Comments	Observations	US	12.09.2008
25	Comments	Observations	EP	26.09.2008
26	Comments	Observations	SE	07.10.2008
27	Comments	Observations	JP	09.10.2008
28	Rapporteur proposal	Proposition du rapporteur	GB	17.10.2008
29	Comments	Observations	US	20.11.2008
30	Comments	Observations	EP	21.11.2008
31	Working Group decision	Décision du groupe de travail	IB	07.01.2009
32	Rapporteur proposal	Proposition du rapporteur	GB	04.02.2009
33	French version	Version française	FR	07.04.2009
34	Comments	Observations	CA	21.04.2009
35	Working Group decision	Décision du groupe de travail	IB	03.08.2009
36	French version	Version française	FR	03.11.2009

EXCERPT FROM DOCUMENT IPC/WG/21/2
EXTRAIT DU DOCUMENT IPC/WG/21/2

REPORT ON THE SEVENTH SESSION OF THE IPC ADVANCED LEVEL SUBCOMMITTEE

17. Since the seventh session of the ALS was the final one, all pending A projects were included in the program of the Working Group. From now on, A projects will designate revision projects originating from the IP5 Offices and C projects will designate revision projects that would be included in the IPC revision program by the Committee. For practical reasons, the schemes adopted by the ALS in the framework of projects A 012, A 013, A 014, A 017, A 018 and A 020 were included in the Technical Annexes of this session (see Technical Annexes 1 to 7 and 9 to this report).

IPC REVISION PROGRAM

General

25. The Working Group noted the decision by the Committee of Experts at its forty-first session that revision projects, including advanced level revision projects, would be considered by the Working Group and forwarded to the Committee for final adoption after completion. It was noted that projects originating from the Trilateral or the IP5 Offices cooperation will be designated by the letter “A” and revision projects included in the IPC revision program by the Committee will be designated by the letter “C” (see paragraph 17, above).

26. Discussions were based on compilations of the relevant revision project files. The Working Group considered nine pending C projects, plus 17 A projects forwarded from the former ALS, and approved amendments relating to those projects (see Technical Annexes 1 to 29 to this report relating to revision projects). The status of those projects and the list of future actions and deadlines are indicated in Annex III to this report.

IPC Revision Projects

27. The Working Group made the following observations with respect to the IPC revision projects. All references to annexes in this paragraph refer to annexes of the corresponding project file, unless otherwise stated.

Project C 449 (electrical) – The English version of Annex 32 was approved (see Technical Annex 20E to this report).

A French version was requested for consideration at the next session of the Working Group.

RAPPORT SUR LA SEPTIÈME SESSION DU SOUS-COMITÉ CHARGÉ DU NIVEAU ÉLEVÉ DE LA CIB

17. Étant donné que la septième session de l'ALS était la dernière, tous les projets A en instance ont été inscrits au programme du groupe du travail. Dorénavant, les projets A désigneront les projets de révision émanant des offices de l'IP5 et les projets C désigneront les projets de révision qui seront inscrits au programme de révision de la CIB par le comité. Pour des raisons pratiques, les schémas adoptés par l'ALS dans le cadre des projets A 012, A 013, A 014, A 017, A 018 et A 020 ont été inclus dans les annexes techniques du rapport sur la session en cours (voir les annexes techniques 1 à 7 et 9 du présent rapport).

PROGRAMME DE RÉVISION DE LA CIB

Généralités

25. Le groupe de travail a pris note de la décision prise par le comité d'experts à sa quarante et unième session selon laquelle les projets de révision, y compris ceux relatifs au niveau élevé, seront examinés par le groupe de travail et transmis au comité pour adoption définitive une fois achevés. Il a été pris note du fait que les projets émanant des offices de la coopération trilatérale ou de l'IP5 seraient désignés par la lettre "A" et que les projets de révision inscrits au programme de révision de la CIB par le comité seraient désignés par la lettre "C" (voir le paragraphe 17).

26. Les délibérations ont eu lieu sur la base de synthèses des dossiers de projet correspondants. Le groupe de travail a examiné neuf projets C en instance ainsi que 17 projets A transmis par l'ancien ALS et a approuvé les modifications relatives à ces projets (voir les annexes techniques 1 à 29 du présent rapport relatives aux projets de révision). L'état d'avancement de ces projets et la liste des mesures à prendre et des délais correspondants font l'objet de l'annexe III du présent rapport.

Projets de révision de la CIB

27. Le groupe de travail a formulé les observations ci-après concernant les projets de révision de la CIB. Dans le présent paragraphe, tout renvoi à des annexes désigne, sauf indication contraire, les annexes du dossier de projet correspondant.

Projet C 449 (électricité) – La version anglaise figurant à l'annexe 32 a été approuvée (voir l'annexe technique 20E du présent rapport).

Une version française a été demandée pour examen par le groupe de travail à sa prochaine session.

ANNEX 20E G07B [Project-Rapporteur : C449/GB <WG21>]

CL M **Title TICKET-ISSUING APPARATUS; TAXIMETERS; ARRANGEMENTS OR APPARATUS FOR COLLECTING FARES, TOLLS OR ENTRANCE FEES AT ONE OR MORE CONTROL POINTS; FRANKING APPARATUS**

CL M Subclass index

MACHINES FOR PRINTING OR ISSUING TICKETS; DETAILS THEREOF **1/00**, **3/00**; **5/00**

OTHER APPARATUS OR SYSTEMS CONCERNING TICKETS

Holders; punches; validating; cancelling **7/00**; **9/00**; **11/00**

TAXIMETERS **13/00**

ARRANGEMENTS OR APPARATUS FOR COLLECTING FARES, TOLLS OR ENTRANCE FEES AT ONE OR MORE CONTROL POINTS **15/00**

FRANKING APPARATUS **17/00**

ANNEX 20F G07B **[Project-Rapporteur : C449/GB <WG21>]**

CL M **Titre**

APPAREILS Á DÉBITER DES TICKETS; APPAREILS Á ENREGISTRER LES PRIX DES BILLETS; DISPOSITIONS OU APPAREILS POUR ENCAISSER LE PRIX DES BILLETS OU LES DROITS D'ENTRÉE OU DE PÉAGE EN UN OU PLUSIEURS POINTS DE CONTRÔLE; APPAREILS Á AFFRANCHIR

CL M Schéma général

APPAREILS Á IMPRIMER OU DÉBITER LES TICKETS; LEURS DÉTAILS **1/00**, **3/00**; **5/00**
AUTRES APPAREILS OU SYSTÈMES CONCERNANT LES TICKETS
Présentoirs; poinçonneuses; validation; annulation **7/00**; **9/00**; **11/00**
APPAREILS Á ENREGISTRER LES PRIX DES BILLETS **13/00**
DISPOSITIONS OU APPAREILS POUR ENCAISSER LE PRIX DES BILLETS OU LES DROITS D'ENTRÉE OU DE PÉAGE EN UN OU PLUSIEURS POINTS DE CONTRÔLE **15/00**
APPAREILS Á AFFRANCHIR **17/00**

IPC/C 452
ORIGINAL: English/French
DATE: 12.11.2009

WORLD INTELLECTUAL PROPERTY ORGANIZATION
ORGANISATION MONDIALE DE LA PROPRIÉTÉ INTELLECTUELLE

GENEVA/GENÈVE

COMMITTEE OF EXPERTS OF THE IPC UNION
COMITÉ D'EXPERTS DE L'UNION DE L'IPC

CL REVISION PROJECT FILE
DOSSIER DE PROJET RÉVISION NIVEAU DE BASE

PROPOSAL BY : **PROPOSITION DE :**	**IPC AREA:** **DOMAINE DE LA CIB :** **B82**
RAPPORTEUR : **US**	**TECHNICAL FIELD :** **DOMAINE TECHNIQUE :** **E**

ANNEX/ ANNEXE	CONTENT/CONTENU		ORIGIN/ ORIGINE	DATE
1	Decision of the subcommittee	Décision du cous-comité	IB	03.01.2008
2	Revision request with proposal	Demande de révision avec proposition	US	03.01.2008
3	Comments	Observations	CN	28.03.2008
4	Comments	Observations	RU	23.04.2008
5	Comments	Observations	US	15.05.2008
6	Proposal - scheme	Proposition - schéma	US	15.05.2008
7	Comments	Observations	IB	20.05.2008
8	Proposal	Proposition	IB	28.05.2008
9	Comments	Observations	EP	28.05.2008
10	Comments	Observations	DE	02.06.2008
11	Comments	Observations	JP	06.06.2008
12	Working Group decision	Décision du groupe de travail	IB	26.06.2008
13	Comments	Observations	EP	30.06.2008
14	Comments	Observations	SE	27.08.2008
15	Comments	Observations	JP	16.09.2008
16	Comments	Observations	IB	02.10.2008

ANNEX/ ANNEXE	CONTENT/CONTENU		ORIGIN/ ORIGINE	DATE
17	Comments	Observations	RU	06.10.2008
18	Comments	Observations	JP	16.10.2008
19	Rapporteur report	Rapport du rapporteur	US	30.10.2008
20	Rapporteur report	Rapport du rapporteur	US	30.10.2008
21	Comments	Observations	JP	06.11.2008
22	Comments	Observations	RU	07.11.2008
23	Working Group decision	Décision du groupe de travail	IB	07.01.2009
24	Rapporteur report	Rapport du rapporteur	US	05.03.2009
25	Consideration by IPC/CE	Examen par le Comité d'experts	IB	09.04.2009
26	Comments	Observations	JP	17.04.2009
27	Comments	Observations	RU	18.05.2009
28	Rapporteur report	Rapport du rapporteur	US	29.05.2009
29	Rapporteur proposal	Proposition du rapporteur	US	30.05.2009
30	Comments	Observations	RU	03.06.2009
31	Working Group decision	Décision du groupe de travail	IB	03.08.2009
32	Comments	Observations	JP	24.09.2009
33	Comments	Observations	RU	24.09.2009
34	Comments	Observations	US	25.09.2009
35	Comments	Observations	SE	29.09.2009
36	Comments	Observations	IB	02.10.2009
37	Comments	Observations	US	13.10.2009
38	Comments	Observations	EP	14.10.2009
39	Comments	Observations	DE	16.10.2009
40	Rapporteur report	Rapport du rapporteur	US	02.11.2009
41	Comments	Observations	EP	04.11.2009
42	Comments	Observations	JP	10.11.2009

Modified Proposal

M **B82 NANO-TECHNOLOGY**

Note

In this class, the following terms are used with the meaning indicated:

- “nano-size" or "nano-scale" relate to a controlled geometrical size below 100 nanometres (nm) in one or more dimensions;
- “nano-structure” means an entity having at least one nano-sized functional component susceptible to make physical, chemical or biological properties or effects available uniquely attributable to the nano-scale.

M B82B NANO-STRUCTURES FORMED BY INDIVIDUAL MANIPULATION OF ATOMS, MOLECULES, OR LIMITED COLLECTIONS OF ATOMS OR MOLECULES AS DISCRETE UNITS; MANUFACTURE OR TREATMENT THEREOF

M **Note(s)**

1. Attention is drawn to the Note following the title of class B82, which defines the meaning of the terms "nano-size", "nano-scale" and "nano-structure" in this class.
2. Attention is drawn to Notes (3)-(5) following the title of subclass B82Y, which requires further classification in B82Y of subject matter already classified in this subclass)
3. This subclass does not cover chemical or biological nano-structures per se, provided for elsewhere, e.g., in classes C08 or C12.
4. Nano-structures having specified features are also classified in appropriate places provided for their structural or functional features, if such features are of interest, in IPC sections A-H.

M 1/00 or Nano-structures formed by individual manipulation of atoms, molecules, limited collections of atoms or molecules as discrete units.

M 3/00 Manufacture or treatment of nano-structures by manipulation of individual atoms, molecules, or limited collections of atoms or molecules as discrete units

N B82Y NANO-STRUCTURES IN GENERAL; MANUFACTURE, TREATMENT OR PROPERTIES THEREOF; APPLICATIONS OF NANO-STRUCTURES; MEASUREMENT OR ANALYSIS AT THE NANO-SCALE

~~Nano-structures in a "broader sense" than those of subclass B82B; use of a nano-structure in a component of a device or system or as part of a process with a particular function or purpose.~~

N Note(s)

1. This subclass covers nano-structures in a " broader sense" than those of subclass B82B, i.e. nano-structures derived from any process; use of at least once of such nano-structure in a component of a device or system or part of a process with a particular function or purpose.

2. Attention is drawn to the Note following the title of class B82, which defines the meaning of the terms "nano-size", "nano-scale" and "nano-structure" in this class.

3. This subclass is intended to provide a basis for a complete search to be made with respect to the subject matter defined by the subclass title and therefore it covers nano-structures and aspects of nano-structures that already have their primary classification elsewhere in the IPC.

4. This subclass is for secondary classification, i.e. for obligatory supplementary classification of subject-matter already obligatorily classified such in other classification places, e.g.:
   - B82B Nano-structure formed by individual manipulation of atoms, molecules, or limited collections of atoms or molecules as discrete units; manufacture or treatment thereof
   - A61K 9/51 Nano-capsules for medicinal preparations
   - B05D 1/20 Langmuir-Blodget films
   - C01B31/02 Carbon nanostructures, e.g. bucky-balls, nanotubes, nanocoils, nano-doughnuts or nano-onions
   - G01Q Scanning Probes techniques; Apparatus structure and manufacture thereof; Scanning probe microscopy.
   - G02F 1/017 Optical quantum wells or boxes
   - H01F 10/32 Nanostructured thin magnetic films
   - H01F 41/30 molecular beam epitaxy (MBE)
   - H01L 29/775 Quantum wire FETs

5. The classification symbols of this subclass are not listed first when assigned to patent documents.

6. In this subclass, multi-aspect classification is applied, so that subject matter characterised by aspects covered by more than one of its groups, which is considered to represent information of interest for search, may also be classified in each of those groups. For example, a nano- capsule for medical preparations that exhibits a specific physical effect uniquely attributable to the nano-scale receives a primary classification in A61K9/51 and is required to be classified in groups B82Y 1/00, 2/00 and 3/00 of this subclass.

7. This subclass B82Y gives no restrictive effect against the developing and use of subdivisions under other IPC classes.

N 1/00 **Nano-structures**

N 2/00 ~~Specified~~ **Specific properties or effects uniquely attributable to the nano-scale**

N 3/00 **Nano-biotechnology or nano-medicine, e.g. protein engineering or drug delivery**

N 4/00 **Nano-technology for information processing, storage or transmission, e.g. quantum computing or single electron logic**

N 5/00 **Nano-technology for interacting, sensing or actuating, e.g. quantum dots as markers in protein assays or molecular motors**

N 6/00 **Nano-optics, e.g. quantum optics or photonic crystals**

N 7/00 **Nano-magnetism, e.g. magnetoimpedance, anisotropic magnetoresistance, giant magnetoresistance or tunnelling magnetoresistance**

N 8/00 **Nano-technology for materials or surface science, e.g. nano-composites**

N 9/00 **Method or apparatus for measurement or analysis of nano-structures**

N 10/00 **Manufacture or treatment of nano-structures**

N 99/00 **Subject matter not provided for in other groups of this subclass**

RU PATENT OFFICE	
IPC Revision Project: **C 452, Class 452**	Date: June 3, 2009

RU thanks US Rapporteur for the scrutinized summary of all the discussion in this project.

RU would like to submit the alternative proposal based on

R's modified proposal (Ann.29, 30.05.09),
IB counter proposal (Ann.8, 28.05.08)
taking into account SE comments (Ann. 10.03.09) and RU comments (Ann.17, 06.10.08)

RU counterproposal

N **B82** Note

In this class, the following terms are used with the meaning indicated:

- "nano-size" or "nano-scale" relate to a controlled geometrical size below 100 nanometres (nm) in one or more dimensions
- "nano-structure" means an entity having at least one nano-sized functional component susceptible to make physical, chemical or biological properties or effects available uniquely attributable to the nano-scale.

C **B82B** **NANOSTRUCTURES NOT PROVIDED FOR ELSWERE; MANUFACTURE OR TREANMENT THEREOF NOT PROVIDED FOR ELSWHERE**

Notes

1. Attention is drawn to the notes following the title of class B82, which define the meaning of the terms "nano-size", "nano-scale" and “nano-structure” in this class.

Taking into account the proposed wording of B82B Notes 2 and 3(Ann.8)

“This subclass does not cover chemical or biological nano-structures per se, provided for elsewhere, e.g. in classes C08 or C12.

When classifying in this subclass, subject matter of interest is also classified in other appropriate places, e.g.:

- *A61K 9/51 Nano-capsules for medicinal preparations*
- *B05D 1/20 Langmuir-Blodget films*
- *C01B31/02 Carbon nanostructures, e.g. bucky-balls, nanotubes, nanocoils, nano-doughnuts or nano-onions*
- *G01Q Scanning Probes techniques; Apparatus structure and manufacture thereof; Scanning probe microscopy.*
- *G02F 1/017 Optical quantum wells or boxes*
- *H01F 10/32 Nanostructured thin magnetic films*
- *H01F 41/30 molecular beam epitaxy (MBE)”*
- *H01L 29/775 Quantum wire FETs*

seem superfluous.

2.This subclass covers subject matter which is not specified elswhere in the IPC.

3. In this subclass, multi-aspect classification is applied, so that subject matter characterised by aspects covered by more than one of its groups is classified in each one of these groups.

1/00 Nano-structures formed by manipulation of individual of atoms, molecules or limited collections of atoms or molecules as discrete units

3/00 Manufacture or treatment of nano-structures formed by manipulation of individual atoms, molecules or limited collections of atoms or molecules as discrete units

N B82Y SPECIFIC USES OR APPLICATIONS OF NANO-STRUCTURES

N **Notes**

1. Attention is drawn to the notes following the title of class B82, which define the meaning of the terms "nano-size", "nano-scale" and “nano-structure” in this class.

2. This subclass is intended for obligatory ***coding (classifying)*** documents already classified or indexed elswhere in the IPC including B82B which relate to one or more than one general field of use or application of nanostructures.

3. The groups of this subclass are intended for for monitoring new trends of development of nanotechnologies and do not replace the classification or indexing codes of other places of the IPC.

4. In this subclass, the use or application of nano-structures is classified in all appropriate groups.

5. The ***codes (classification symbols)*** of this subclass are not listed first when assigned to patent documents.

N **5/00** **Nano-biotechnology or nano-medicine, e.g. protein engineering or drug delivery**

N **15/00** **Nano-technology for information processing, storage or transmission, e.g. quantum computing or single electron logic**

N **20/00** **Nano-technology for interacting, sensing or actuating, e.g. quantum dots as markers in protein assays or molecular motors**

N **25/00** **Nano-optics, e.g. quantum optics or photonic crystals**

N **30/00** **Nano-magnetism, e.g. magnetoimpedance, anisotropic magnetoresistance, giant magnetoresistance or tunnelling magnetoresistance**

N **35/00** **Nano-technology for materials or surface science, e.g. nano-composites**

N **99/00** **Subject matter not provided for in other groups of this subclass**

EXCERPT FROM DOCUMENT IPC/WG/21/2
EXTRAIT DU DOCUMENT IPC/WG/21/2

REPORT ON THE SEVENTH SESSION OF THE IPC ADVANCED LEVEL SUBCOMMITTEE

17. Since the seventh session of the ALS was the final one, all pending A projects were included in the program of the Working Group. From now on, A projects will designate revision projects originating from the IP5 Offices and C projects will designate revision projects that would be included in the IPC revision program by the Committee. For practical reasons, the schemes adopted by the ALS in the framework of projects A 012, A 013, A 014, A 017, A 018 and A 020 were included in the Technical Annexes of this session (see Technical Annexes 1 to 7 and 9 to this report).

IPC REVISION PROGRAM

General

25. The Working Group noted the decision by the Committee of Experts at its forty-first session that revision projects, including advanced level revision projects, would be considered by the Working Group and forwarded to the Committee for final adoption after completion. It was noted that projects originating from the Trilateral or the IP5 Offices cooperation will be designated by the letter "A" and revision projects included in the IPC revision program by the Committee will be designated by the letter "C" (see paragraph 17, above).

26. Discussions were based on compilations of the relevant revision project files. The Working Group considered nine pending C projects, plus 17 A projects forwarded from the former ALS, and approved amendments relating to those projects (see Technical Annexes 1 to 29 to this report relating to revision projects). The status of those projects and the list of future actions and deadlines are indicated in Annex III to this report.

IPC Revision Projects

27. The Working Group made the following observations with respect to the IPC revision projects. All references to annexes in this paragraph refer to annexes of the corresponding project file, unless otherwise stated.

Project C 452 (electrical) – The Working Group noted the decisions of the Committee at its forty-first session, in particular that the Working Group had been invited to continue the revision work on project C 452, taking into account the following remarks:

"– all nano-technology related art should be collected in one place, namely class B82, in order to assure better visibility;

"– a new subclass should be created to provide a basis for a complete search to be made with respect to nano-technology applications, as defined in the subclass title, notes and definitions. It should be used, in combination with other classification symbols which cover relevant aspects of the subject matter, to obligatorily classify either invention or additional information. It should be used in order to easily collect statistics to identify trends in nano-technology applications and to identify places elsewhere in the IPC where nano-technology applications develop;

"– this new subclass should be created at the end of class B82, e.g., as B82Y, so as to clearly distinguish it from the other "ordinary" subclass for nano-technology. It should be broadly subdivided into main groups which should not be further subdivided according to technical features; and

"– the scope of existing subclass B82B should be broadened in order to cover technical features that fall under the new definition of "nano-structure", as proposed in the new Note under the title of class B82 (see Annex 6 to project file C 452)."

It was further noted that several members of the Working Group, including the Rapporteur, did not agree with some of the above remarks, namely, that:

– the scope of existing subclass B82B should be broadened; and

– the new subclass should cover *exclusively* nano-technology applications.

In order to make progress on the project, it was decided to approve parts of it (see Technical Annexes 21E to 23E to this report) where consensus of all members of the Working Group already existed, and therefore:

– a Note defining “nano-size” and “nano-structure” under class B82 was approved;

– the titles of groups B82B 1/00 and B82B 3/00 were amended;

– new subclass B82Y was approved with a provisional title; and

– new main groups in subclass B82Y, covering nano-technology applications, were approved.

Comments were invited on:

– whether the scope of subclass B82B should be broadened to cover nano-structures and their manufacture which are not covered by existing groups B82B 1/00 and B82B 3/00;

– in case there was need of scope broadening, whether similar rules of classification as those proposed for subclass B82Y should apply to the new groups to be created in subclass B82B;

– the amended title and notes proposed for subclass B82B by the Rapporteur and by the Russian Federation (see Annexes 29 and 30 to the project file);

– the need to include additional main groups in subclass B82Y covering subject matter beyond “specific uses or applications of nano-structures” as proposed by the Rapporteur in said Annex 29; and

– the title and Notes proposed for subclass B82Y by the Rapporteur and by Russia in said Annexes 29 and 30.

RAPPORT SUR LA SEPTIÈME SESSION DU SOUS-COMITÉ CHARGÉ DU NIVEAU ÉLEVÉ DE LA CIB

17. Étant donné que la septième session de l’ALS était la dernière, tous les projets A en instance ont été inscrits au programme du groupe du travail. Dorénavant, les projets A désigneront les projets de révision émanant des offices de l’IP5 et les projets C désigneront les projets de révision qui seront inscrits au programme de révision de la CIB par le comité. Pour des raisons pratiques, les schémas adoptés par l’ALS dans le cadre des projets A 012, A 013, A 014, A 017, A 018 et A 020 ont été inclus dans les annexes techniques du rapport sur la session en cours (voir les annexes techniques 1 à 7 et 9 du présent rapport).

PROGRAMME DE RÉVISION DE LA CIB

Généralités

25. Le groupe de travail a pris note de la décision prise par le comité d’experts à sa quarante et unième session selon laquelle les projets de révision, y compris ceux relatifs au niveau élevé, seront examinés par le groupe de travail et transmis au comité pour adoption définitive une fois achevés. Il a été pris note du fait que les projets émanant des offices de la coopération trilatérale ou de l’IP5 seraient désignés par la lettre “A” et que les projets de révision inscrits au programme de révision de la CIB par le comité seraient désignés par la lettre “C” (voir le paragraphe 17).

26. Les délibérations ont eu lieu sur la base de synthèses des dossiers de projet correspondants. Le groupe de travail a examiné neuf projets C en instance ainsi que 17 projets A transmis par l’ancien ALS et a approuvé les modifications relatives à ces projets (voir les annexes techniques 1 à 29 du présent rapport relatives aux

projets de révision). L'état d'avancement de ces projets et la liste des mesures à prendre et des délais correspondants font l'objet de l'annexe III du présent rapport.

Projets de révision de la CIB

27. Le groupe de travail a formulé les observations ci-après concernant les projets de révision de la CIB. Dans le présent paragraphe, tout renvoi à des annexes désigne, sauf indication contraire, les annexes du dossier de projet correspondant.

Projet C 452 (électricité) – Le groupe de travail a pris note des décisions adoptées par le comité à sa quarante et unième session, notamment en vue d'inviter le groupe de travail à poursuivre la révision du projet C 452 compte tenu des observations ci-après :

"– toutes les techniques relatives à la nanotechnologie devraient être rassemblées dans un seul endroit, à savoir la classe B82, afin d'assurer une meilleure visibilité;

"– une nouvelle sous-classe devrait être créée pour permettre d'effectuer une recherche complète sur les applications de la nanotechnologie, conformément au titre, aux notes et aux définitions de la sous-classe. Elle devrait être utilisée, en corrélation avec les autres symboles de classement qui couvrent les aspects pertinents de la matière, pour le classement obligatoire soit de l'invention, soit de l'information supplémentaire. Elle servirait à faciliter la collecte de statistiques pour dégager les tendances des applications de la nanotechnologie et recenser les autres endroits de la CIB où ces applications se développent;

"– cette nouvelle sous-classe devrait être créée à la fin de la classe B82, par exemple en tant que B82Y, afin de la différencier clairement des autres sous-classes "ordinaires" dans le domaine de la nanotechnologie. Elle devrait être *grosso modo* subdivisée en deux groupes principaux, lesquels ne devraient pas être subdivisés en fonction des éléments techniques; et

"– la portée de la sous-classe B82B actuelle devrait être élargie afin de couvrir les éléments techniques qui relèvent de la nouvelle définition d'une "nanostructure", ainsi qu'il est proposé dans la nouvelle note sous le titre de la classe B82 (voir l'annexe 6 du dossier de projet C 452)."

Il a également été noté que plusieurs membres du groupe de travail, dont le rapporteur, ne souscrivaient pas à certaines de ces observations, notamment celles selon lesquelles

– la portée de la sous-classe B82B actuelle devrait être élargie; et

– la nouvelle sous-classe devrait couvrir *exclusivement* les applications de la nanotechnologie.

Afin de progresser dans l'exécution de ce projet, il a été décidé d'approuver les parties (voir les annexes techniques 21E à 23E du présent rapport) faisant déjà l'objet d'un consensus parmi les membres du groupe de travail, de sorte que

– une note définissant les termes "nano-size" et "nano-structure" sous la classe B82 a été approuvée;

– les titres des groupes B82B 1/00 et B82B 3/00 ont été modifiés;

– une nouvelle sous-classe B82Y a été approuvée avec un titre provisoire; et

– de nouveaux groupes principaux dans la classe B82Y, couvrant les applications de la nanotechnologie, ont été approuvés.

Des observations ont été demandées

– sur le point de savoir s'il convenait d'élargir la portée de la sous-classe B82B de manière à couvrir les nanostructures et leur fabrication qui ne sont pas couvertes par les groupes B82B 1/00 et B82B 3/00 actuels;

– dans le cas où il serait nécessaire d'élargir cette portée, sur le point de savoir si des règles de classement similaires à celles proposées pour la sous-classe B82Y devraient s'appliquer au nouveau groupe à créer dans la sous-classe B82B;

– sur le titre modifié et les notes proposées pour la sous-classe B82B par le rapporteur et par la Fédération de Russie (voir les annexes 29 et 30 du dossier de projet);

– sur la nécessité d'inclure dans la sous-classe B82Y des groupes principaux supplémentaires couvrant les matières non couvertes par les "utilisations ou applications spécifiques des nanostructures", conformément à la proposition du rapporteur figurant à l'annexe 29; et

– sur le titre et les notes proposés pour la sous-classe B82Y par le rapporteur et par la Fédération de Russie dans les annexes 29 et 30.

ANNEX 21E B82 **[Project-Rapporteur : C452/US <WG21>]**

CL N *Note*

B82 In this class, the following terms are used with the meaning indicated:

- *"nano-size" or "nano-scale" relate to a controlled geometrical size below 100 nanometres (nm) in one or more dimensions;* **[new.]**
- *"nano-structure" means an entity having at least one nano-sized functional component that makes physical, chemical or biological properties or effects available, which are uniquely attributable to the nano-scale.* **[new.]**

ANNEX 22E B82B **[Project-Rapporteur : C452/US <WG21>]**

CL M **1/00** **Nano-structures formed by manipulation of individual atoms or molecules, or limited collections of atoms or molecules as discrete units**

CL M **3/00** **Manufacture or treatment of nano-structures by manipulation of individual atoms or molecules, or limited collections of atoms or molecules as discrete units**

ANNEX 23E B82Y **[Project-Rapporteur : C452/US <WG21>]**

CL N ***Title*** ***SPECIFIC USES OR APPLICATIONS OF NANO-STRUCTURES***

CL N ***5/00*** ***Nano-biotechnology or nano-medicine, e.g. protein engineering or drug delivery***

CL N ***10/00 Nano-technology for information processing, storage or transmission, e.g. quantum computing or single electron logic***

CL N ***15/00 Nano-technology for interacting, sensing or actuating, e.g. quantum dots as markers in protein assays or molecular motors***

CL N ***20/00 Nano-optics, e.g. quantum optics or photonic crystals***

CL N ***25/00 Nano-magnetism, e.g. magnetoimpedance, anisotropic magnetoresistance, giant magnetoresistance or tunneling magnetoresistance***

CL N ***30/00 Nano-technology for materials or surface science, e.g. nano-composites***

CL N ***99/00 Subject matter not provided for in other groups of this subclass***

JAPAN PATENT OFFICE

September 24, 2009

Project: C452 Subclass: B82

Comment

The following are the JP opinion in response to the questions that were depicted in Paragraph 27 of the Report of the 21st RWG Meeting in June 2009, which excerpt was posted by IB as Annex 31 to this project file. Based on this opinion, JP prepared and attached to this Comment a proposal of the scheme for B82 and B82B portions, which is identical with the one submitted by US Rapporteur in Annex 29.

Question（１）

Should the scope of subclass B82B be broadened to cover nano-structures and their manufacture which are not covered by existing groups B82B 1/00 and B82B 3/00?

JP would object to broadening the scope of B82B as the place for primary classification. One of the purposes of this project is “to collect in one single place, readily visible to all users, all art related to nanotechnology” (Excerpt from IPC/WG/20/2 which was posted as Annex 23.) For realizing this purpose, it is considered important to collect all documents related to nanotechnology in one subclass (B82Y). Besides, changing the scope of existing subclass would surely cause confusion and burden of reclassification on the part of users. Therefore, JP cannot agree with the broadening of the scope of B82B.

In order to realize the abovementioned purpose, those arts related to nano-structures and their manufacture that are not covered by existing groups of B82B 1/00 and B82B 3/00 should be covered by creating new group(s) for secondary classification as are the cases with B82Y 1/00 or B82Y 10/00 as proposed by Rapporteur in Annex 29.

Question（２）

In case there was need of scope broadening, should similar rules of classification as those proposed for subclass B82Y apply to the new groups to be created in B82B?

In addition to our opposition to the broadening of the scope of B82B as above, JP would like to add the opposition opinion against the creation of any new group in B82B to which similar rules of classification as those proposed for B82Y should apply.

When considering this Question (2), it should be remembered that the point of making it “readily visible to all users” was already agreed upon in the RWG meeting, as was mentioned above. For satisfying this condition, JP considers it essential to make clear distinction between the existing places for primary classification and new type places for secondary classification. Therefore, It would be preferable to divide the subclass depending on the kind of classification, i.e. whether a place in question is provided for primary classification or for secondary classification. In this context, it should be highly objectionable to create new groups to which similar rules to secondary classification B82Y in primary classification B82B,

..

Question（3）

Are the amended title and notes proposed for subclass B82B by US Rapporteur and by Russia in Annexes 29 and 30 approvable?

JP would support the modified title as proposed in Annex 29.

Since JP is against the broadening of the scope of B82B, JP cannot agree with the title thereof as proposed in Annex 30. Moreover, it should be remarked that the style of title as proposed in Annex 30 (making reservation by using the phrase of "NOT PROVIDED FOR ELSEWHERE") would prevent the realization of one of the purposes of this project for "collecting all nano-technology related arts in one single place." JP is further afraid that the proposed title in Annex 30 could make unclear the borderline between B82B and other existing subclasses which would surely be disadvantageous for IPC users.

Question（4）

Is it necessary to include additional main groups in subclass B82Y covering subject matter beyond "specific uses or applications of nano-structures" as proposed by the Rapporteur in said Annex 29? Are the title and Notes proposed for subclass B82Y by US Rapporteur and by Russia in said Annexes 29 and 30 approvable?

As concerns B82Y, JP would generally support Rapporteur's proposal in Annex 29.

However, with regard to Note 7 to B82Y, JP is aware of the existence of such opinion as that the content thereof is not something to be indicated as a Note. In fact, this matter was approved by the previous CE meeting as one of the conditions of the new scheme and IB was invited to submit a proposal for modification of the IPC Guide with the said condition taken into account. When the IPC Guide be properly modified for satisfying the said condition, JP would have no objection to deleting Note 7 from B82Y.

For the sake of easier reference, herewith are cited relevant decisions from the 41st CE meeting (CE/41/6).

Paragraph 42. It was recalled that the Working Group, at its twentieth session held in November 2008, had concluded that the new scheme proposed in the framework of project C 452 (nano-technology) should be:
- universal;
- secondary;
- obligatorily applied;
- <u>allow the development of related subdivisions in ordinary classification places;</u>
- "temporary"; and
- readily visible to all users.

Paragraph 45. It was therefore decided, instead of introducing another type of scheme, to review and amend all paragraphs of the *Guide* relative to multiple classification and indexing, aiming at simplification. The International Bureau was requested to prepare and post a comprehensive proposal to project CE 413 and subsequently discussion could take place in the framework of that project.

<u>JP Proposal</u>

M **B82** **NANO-TECHNOLOGY**

<u>Note</u>

In this class, the following terms are used with the meaning indicated:

- "nano-size" or "nano-scale" relate to a controlled geometrical size below 100

nanometres (nm) in one or more dimensions;

- “nano-structure” means an entity having at least one nano-sized functional component susceptible to make physical, chemical or biological properties or effects available uniquely attributable to the nano-scale.

M B82B NANO-STRUCTURES FORMED BY INDIVIDUAL MANIPULATION OF ATOMS, MOLECULES, OR LIMITED COLLECTIONS OF ATOMS OR MOLECULES AS DISCRETE UNITS; MANUFACTURE OR TREATMENT THEREOF

M **Note(s)**

1. Attention is drawn to the Note following the title of class B82, which defines the meaning of the terms "nano-size", "nano-scale" and "nano-structure" in this class.
2. Attention is drawn to Notes (3)-(5) following the title of subclass B82Y, which requires further classification in B82Y of subject matter already classified in this subclass)
3. This subclass does not cover chemical or biological nano-structures per se, provided for elsewhere, e.g., in classes C08 or C12.
4. Nano-structures having specified features are also classified in appropriate places provided for their structural or functional features, if such features are of interest, in IPC sections A-H.

M 1/00 Nano-structures formed by individual manipulation of atoms, molecules, or limited collections of atoms or molecules as discrete units.

M 3/00 Manufacture or treatment of nano-structures by manipulation of individual atoms, molecules, or limited collections of atoms or molecules as discrete units

N B82Y NANO-STRUCTURES IN GENERAL; MANUFACTURE, TREATMENT OR PROPERTIES THEREOF; APPLICATIONS OF NANO-STRUCTURES; MEASUREMENT OR ANALYSIS AT THE NANO-SCALE

N Note(s)

1. This subclass covers nano-structures in a " broader sense" than those of subclass B82B, i.e. nano-structures derived from any process; use of at least once of such nano-structure in a component of a device or system or part of a process with a particular function or purpose.

2. Attention is drawn to the Note following the title of class B82, which defines the meaning of the terms "nano-size", "nano-scale" and "nano-structure" in this class.

3. This subclass is intended to provide a basis for a complete search to be made with respect to the subject matter defined by the subclass title and therefore it covers nano-structures and aspects of nano-structures that already have their primary classification elsewhere in the IPC.

4. This subclass is for secondary classification, i.e. for obligatory supplementary classification of subject-matter already obligatorily classified such in other classification places, e.g.:

- B82B Nano-structure formed by individual manipulation of atoms, molecules, or limited collections of atoms or molecules as discrete units; manufacture or treatment thereof
- A61K 9/51 Nano-capsules for medicinal preparations
- B05D 1/20 Langmuir-Blodget films
- C01B31/02 Carbon nanostructures, e.g. bucky-balls, nanotubes, nanocoils, nano-doughnuts or nano-onions
- G01Q Scanning Probes techniques; Apparatus structure and manufacture thereof; Scanning probe microscopy.
- G02F 1/017 Optical quantum wells or boxes
- H01F 10/32 Nanostructured thin magnetic films
- H01F 41/30 molecular beam epitaxy (MBE)
- H01L 29/775 Quantum wire FETs

5. The classification symbols of this subclass are not listed first when assigned to patent documents.

6. In this subclass, multi-aspect classification is applied, so that subject matter characterised by aspects covered by more than one of its groups, which is considered to represent information of interest for search, may also be classified in each of those groups. For example, a nano- capsule for medical preparations that exhibits a specific physical effect uniquely attributable to the nano-scale receives a primary classification in A61K9/51 and is required to be classified in groups B82Y 1/00, 2/00 and 3/00 of this subclass.

7. ***This subclass B82Y gives no restrictive effect against the developing and use of subdivisions under other IPC classes. （temporary note until IPC guide is modified）***

N 1/00 Nano-structures

N 2/00 Specific properties or effects uniquely attributable to the nano-scale

N 3/00 Nano-biotechnology or nano-medicine, e.g. protein engineering or drug delivery

N 4/00 Nano-technology for information processing, storage or transmission, e.g. quantum computing or single electron logic

N 5/00 Nano-technology for interacting, sensing or actuating, e.g. quantum dots as markers in protein assays or molecular motors

N 6/00 Nano-optics, e.g. quantum optics or photonic crystals

N 7/00 Nano-magnetism, e.g. magnetoimpedance, anisotropic magnetoresistance, giant magnetoresistance or tunnelling magnetoresistance

N 8/00 Nano-technology for materials or surface science, e.g. nano-composites

N 9/00 Method or apparatus for measurement or analysis of nano-structures

N 10/00 Manufacture or treatment of nano-structures

N 99/00 Subject matter not provided for in other groups of this subclass

RU PATENT OFFICE	
RU comments	
IPC Revision Project: **C 452, Class B82**	Date: September 24, 2009

Re: IPC/WG/21/2

Comments were invited on:

– whether the scope of subclass B82B should be broadened to cover nano-structures and their manufacture which are not covered by existing groups B82B 1/00 and B82B 3/00;

RU would agree to create in B82B two additional groups for nano-structures not covered by 1/00 and for manufacture or treatment of nano-structures not covered by 3/00 only in the case if subclass B82B is the residual place for all kind of nano-structures or manufacture thereof.

– in case there was need of scope broadening, whether similar rules of classification as those proposed for subclass B82Y should apply to the new groups to be created in subclass B82B;

No, classification rules for subclass B82B should be different taking into account RU approach to the creation of new subclass B82Y and the change of B82B title.

– the amended title and notes proposed for subclass B82B by the Rapporteur and by Russia (see Annexes 29 and 30 to the project file);

In RU opinion B82B title wording as proposed in Ann.30 seems reasonable.

The notes for B82B see our detailed proposal below. We did not include the note (3) (Ann. 29), it was omitted in EP proposal (Ann. 9).

- the need to include additional main groups in subclass B82Y covering subject matter beyond "specific uses or applications of nano-structures" as proposed by the Rapporteur in said Annex 29;

We do not see the necessity to include in B82Y any additional groups except those which were adopted at WG 21.

From our point of view it would be more efficient to transfer the groups **B82Y 1/00 Nano-sructures** and **B82Y 10/00 Manufacture or treatment of nanostructures** to B82B. Taking into account that in accordance with our proposal B82B should be the residual subclass and B82Y is intended to be used for obligatory classification such transfer would help to avoid multiple classification both in B82Y and in other IPC places.

Group **B82Y 2/00 Specific properties or effects uniquely attributable to the nano-scale** (Ann.29) is too broad and could be assigned to the huge number of nano-documents so we consider this group will not facilitate search in the field of nanotechnologies.

Group **B82Y 9/00 Methods or apparatus for measurement or analysis of nanostructures** (Ann. 29) can lead to overlapping with other IPC places: G01Q and some other subclasses of G01.
In view of the fact that US and RU and some other offices agree to use B82Y for obligatory classification these two groups does not seem to us useful.
For the said reasons RU would prefer to exclude groups 2/00 and 9/00 from B82Y scheme (Ann. 29).

– the title and Notes proposed for subclass B82Y by the Rapporteur and by Russia in said Annexes 29 and 30.

According to the said above B82Y title should read as follows:
“USE OR APPLICATIONS OF NANO-STRUCTURES”.
RU would prefer to delete the term “specific” from this wording (as it was in Ann. 30). B82Y should be used as an “ordinary” classification scheme. Obligatory assigning B82Y symbol will provide the complete search of nano-documents.

Notes to the subclass B82Y see below in our modified detailed proposal. We hope that these notes will not lead to the great revision of the GUIDE to the IPC.

RU detailed proposal

C **B82B** **NANOSTRUCTURES NOT PROVIDED FOR ELSWERE; MANUFACTURE OR TREANMENT THEREOF NOT PROVIDED FOR ELSWHERE**

Notes

1. Attention is drawn to the notes following the title of class B82, which define the meaning of the terms "nano-size", "nano-scale" and “nano-structure” in this class.

2.This subclass covers subject matter which is not specified elswhere in the IPC.

3. In this subclass, multi-aspect classification is applied, so that subject matter characterised by aspects covered by more than one of its groups is classified in each one of these groups.

C **1/00** **Nano-structures formed by manipulation of individual atoms, molecules or limited collections of atoms or molecules as discrete units**

C **3/00** **Manufacture or treatment of nano-structures formed by manipulation of individual atoms, molecules or limited collections of atoms or molecules as discrete units**

N **5/00** **Nano-structures not covered by 1/00**

N **7/00** **Manufacture or treatment of nano-structures not covered by 3/00**

N B82Y USE OR APPLICATIONS OF NANO-STRUCTURES

N **Notes**

1. Attention is drawn to the notes following the title of class B82, which define the meaning of the terms "nano-size", "nano-scale" and “nano-structure” in this class.

2. This subclass is intended to provide a place for complete search with respect to the subect matter defined by the subclass title, notes and definitions.

2. This subclass is intended for obligatory ***classifying*** documents already classified elswhere in the IPC including B82B which relate to one or more than one field of use or application of nanostructures.

3. This subclass is intended for classifying either invention or additional information.

4. The groups of this subclass are intended for easily collecting statistics and monitoring new trends of development of nanotechnologies and do not replace the classification symbols or indexing codes of other places of the IPC.

5. This subclass is used for identifying places elswere in the IPC where nano-technologies develop.

6. The ***classification symbols*** of this subclass can not be used independently but always in combination with classification symbols of the appropriate IPC places and they are not listed first when assigned to patent documents.

7. In this subclass, the use or application of nano-structures is classified in all appropriate groups.

N **5/00 Nano-biotechnology or nano-medicine, e.g. protein engineering or drug delivery**

N **10/00 Nano-technology for information processing, storage or transmission, e.g. quantum computing or single electron logic**

N **15/00 Nano-technology for interacting, sensing or actuating, e.g. quantum dots as markers in protein assays or molecular motors**

N **20/00 Nano-optics, e.g. quantum optics or photonic crystals**

N **25/00 Nano-magnetism, e.g. magnetoimpedance, anisotropic magnetoresistance, giant magnetoresistance or tunnelling magnetoresistance**

N **30/00 Nano-technology for materials or surface science, e.g. nano-composites**

N **99/00 Subject matter not provided for in other groups of this subclass**

United States Patent and Trademark Office

Project: C452 Class – B82 Date: September 25, 2009

The Revision Working Group (21st Session) invited comments on 5 issues as shown in Annex 31 of the project file. US comments follow.

– **whether the scope of subclass B82B should be broadened to cover nano-structures and their manufacture which are not covered by existing groups B82B 1/00 and B82B 3/00**

US believes the scope of B82B should not be broadened to cover nano-structures and their manufacture which are not cover by existing groups B82B 1/00 and B82B 3/00. As it has been expressed before by the US as well as other RWG members, nano-structures other than those manufactured from "bottom-up" processes, ie., by manipulating atoms or molecules as discrete units during their manufacture, are covered elsewhere in the IPC. Since B82B at present is considered a scheme for primary classifications, it would not only confuse users to have multiple "primary" classification schemes providing for the same subject matter, but it would cause unnecessary dual classification.

– **in case there was need of scope broadening, whether similar rules of classification as those proposed for subclass B82Y should apply to the new groups to be created in subclass B82B**

US does not support scope broadening and believes including new groups in B82B to provide for subject matter that is already classified elsewhere is confusing to the users since these groups will have a different set of rules than B82B 1/00 and 3/00. Since there is already proposed a place for such subject matter (B82Y) it would seem more logical to include this subject matter in B82Y where the "special" rules will apply.

– **the amended title and notes proposed for subclass B82B by the Rapporteur and by the Russian Federation (see Annexes 29 and 30 to the project file)**

US supports the title and notes for B82B proposed by Rapporteur in Annex 29 in that it clearly states what subject matter is to be classified into the subclass whereas the RU proposal of Annex 30 is very general. US furthermore believes it would be confusing to users to incorporate multi-aspect classification within B82B as proposed by RU in view of the adoption at RWG/21 of B82Y as an obligatory secondary classification scheme.

– **the need to include additional main groups in subclass B82Y covering subject matter beyond "specific uses or applications of nano-structures" as proposed by the Rapporteur in said Annex 29**

US supports the Rapporteur's proposal of Annex 29 for including the subject matter beyond the specific uses or applications of nano-structures. Since the stated goal of this project is to "collect all nano-technology in one place to assure visibility", US believes groups including subject matter beyond uses or applications are extremely useful and should be included in B82Y. For the reasons stated previously, it would appear these new groups would most appropriately belong in B82Y which is a "secondary" classification place rather than B82B which is a "primary" classification place.

The need for additional main groups in B82Y is further illustrated by the difficulty in retrieving prior art examples of nanostructures and manufacturing methods not involving the manipulation of atoms or molecules as individual units. Several documents highlighting subject matter for which a current search of primary areas of the IPC is arduous include the following: US7476442 “Nanoparticle Chains and Preparation Thereof”; US7537825 “Nano-Engineered Material Architectures: Ultra-Tough Hybrid Nanocomposite System”; US6899945 “Entangled Single-Wall Carbon Nanotube Solid Material and Methods for Making Same”; US6596396 “Thin-Film-Like Particles Having Skeleton Constructed by Carbons and Isolated Films”; US6586093 “Nanostructures, Their applications and Method for Making Them”.

– **the title and Notes proposed for subclass B82Y by the Rapporteur and by Russia in said Annexes 29 and 30**

US supports the title and notes proposed by Rapporteur in Annex 29, since we believe this subclass should not be narrowed to only provide for specific uses or applications of nano-structures. In order to meet the goal of collecting all nano-technology in one place, this subclass must be able to provide for more than just uses and applications, thereby requiring a broader title.

US supports the comments submitted by JP in Annex 32. For the reasons stated above, US is unable to fully support the RU proposal of Annex 33 and believes this proposal could lead to failure of users to classify into the primary classification places providing for nano-technology subject matter which already exist in the IPC. However, we tend to agree with RU concerning their analysis of group B82Y 2/00 “Specific properties or effects uniquely attributable to the nano-scale”. We agree that this group may be too broad to be useful in that an exceedingly large number of nano-technology documents could be classified here making a search impractical.

Swedish Patent and Registration Office

IPC Revision Project C452, class B82 **September 29th, 2009**

Comments

(relating to annexes 29-34)

IPC/WG/21 invited comments on:

- **Whether the scope of subclass B82B should be broadened to cover nano-structures and their manufacture which are not covered by existing groups B82B 1/00 and B82B 3/00:**

No, we agree with the comments by JP and US in annexes 32 and 34.

- **In case there was need of scope broadening, whether similar rules of classification as those proposed for subclass B82Y should apply to the new groups to be created in subclass B82B:**

No, see above!

- **The amended title and notes proposed for subclass B82B by the Rapporteur and by the Russian Federation (see Annexes 29 and 30 to the project file):**

The title should of course be adapted to the scope that is eventually decided. In general, we prefer the philosophy of the notes of Annex 29. However, we see need for some minor modifications:

1. We think the proposed Note (2) approaches the relationship in a backwards way. It should give the rule in the context of B82B, rather than make the user jump to another page of the IPC to see it in the context of B82Y.

2. We think it is unusual to refer to whole sections, as proposed in Note (4). A couple of more specific examples would usually be required.

3. The notes should be placed in the order prescribed by the "Guidelines for Revision"

We propose:

(1) ***This subclass does not cover chemical or biological nano-structures per se, provided for elsewhere, e.g. in classes C08 or C12.***

(2) ***Attention is drawn to the Note following the title of class B82, which defines the meaning of the terms "nano-size", "nano-scale" and "nano-structure" in this class.***

(3) ***Subject matter classified in this subclass is further classified in subclass B82Y, in order to enable a complete search of nano-structure technology using classification symbols of B82Y in combination with classification symbols of B82B.***

(4) ***Nano-structures having specialised features or functions are further classified in appropriate places in other subclasses that provide for those features or functions, e.g. in G01Q or G02F 1/017*** *<or other more suitable examples!>*.

- **<u>The need to include additional main groups in subclass B82Y covering subject matter beyond "specific uses or applications of nano-structures" as proposed by the Rapporteur in Annex 29:</u>**

We are opposed to the creation of the proposed 1/00 "Nano-structures", because every single document disclosing a nano-structure could be classified in this main group. This would result in a huge number of classifications, and we can't see what it would contribute beyond a classification in other existing or proposed groups! The only possible search purpose would seem to be for identification of nano-structures that don't have a specified function or application. However, any such documents, if they exist, would be drowned in thousands of documents that deal with nano-structures that are also classified elsewhere. We see no use for this.

We are also opposed to the creation of the proposed 2/00 "Specific properties or effects uniquely attributable to the nano-scale". Although we can see the use of specific groups relating to specific properties or effects, a main group with such broad scope serves no purpose. When the time is ripe, more specific main groups could be created for properties or effects that are actually identified and of search use.

We would prefer a clean scheme for only uses and applications of nano-structures. However, we can accept 9/00 and 10/00 if there is a majority in favour of them. However, for the user it must feel silly to classify in B82B 3/00 "Manufacture or treatment of nano-structures" and then be required to classify the same invention one more time in a group with an identical title; B82Y 10/00 "Manufacture or treatment of nano-structures"!

- **<u>The title and Notes proposed for subclass B82Y by the Rapporteur and by Russia in said Annexes 29 and 30</u>**

Subclass title: We think "Measurement or analysis at the nano-scale" is broader than the corresponding actual main group title "Methods or apparatus for measurement and analysis of nano-structures", since measurement of non-nano-structures can be made on nano-scale. Since we are opposed to creation of 1/00 and 2/00 we propose:

B82Y APPLICATIONS OF NANO-STRUCTURES; MANUFACTURE, TREATMENT, MEASUREMENT OR ANALYSIS OF NANO-STRUCTURES

Note (1): In view of the restricted title of B82B and its main groups we think the reference to B82B is unnecessary.

Note (3): We would prefer to record in the note how the subclass is intended to be used for searching.

Note (6): The example must be replaced or modified if main groups 1/00 and 2/00 will not be introduced. On the other hand, if the main groups are limited to those that are of obvious use there will probably not be need for an example.

Note (7) belongs in the Guidelines for Revision, not in the scheme.

In general, the wording should be better adapted to IPC style. We propose the following:

<u>Notes</u>

(1) This subclass covers applications and aspects of nano-structures which are produced by any methods, and is not restricted to those that are formed by manipulation of individual atoms or molecules.

(2) Attention is drawn to the Note following the title of class B82, which defines the meaning of the terms "nano-size", "nano-scale" and "nano-structure" in this subclass.

(3) ***This subclass is intended to enable a complete search of subject matter related to nano-structures by combination of classification symbols of this subclass and classification symbols from other subclasses. Therefore this subclass covers nano-structures and aspects of nano-structures that can also be classified elsewhere in the IPC.***

(4) ***This subclass is for secondary classification, i.e. for obligatory supplementary classification of subject-matter already classified as such in other classification places, e.g.:***

- ***B82B*** ***Nano-structures formed by individual manipulation of atoms, molecules, or limited collections of atoms or molecules as discrete units; Manufacture or treatment thereof***
- ***A61K 9/51*** ***Nano-capsules for medicinal preparations***
- ***B05D 1/20*** ***Langmuir-Blodget films***
- ***C01B31/02*** ***Carbon nano-structures, e.g. bucky-balls, nanotubes, nanocoils, nano-doughnuts or nano-onions***
- ***G01Q*** ***Scanning probes techniques; Apparatus structure and manufacture thereof; Scanning probe microscopy***
- ***G02F 1/017*** ***Optical quantum wells or boxes***
- ***H01F 10/32*** ***Nano-structured thin magnetic films***
- ***H01F 41/30*** ***Molecular beam epitaxy (MBE)***
- ***H01L 29/775*** ***Quantum wire FETs***

(5) ***The classification symbols of this subclass are not listed first when assigned to patent documents.***

(6) ***In this subclass multi-aspect classification is applied, so that aspects of subject matter that are covered by more than one of its groups should be classified in each of those groups.***

Anders Bruun

WORLD INTELLECTUAL PROPERTY ORGANIZATION		
Project: **C452**	Subject: **Nanotechnology**	IPC range: **B82**
Comments		September 30, 2009

The International Bureau (IB) is involved in this project since it was requested by the Committee of Experts (CE) to prepare a proposal amending the *Guide* (see Project CE 413) in order to simplify rules for multiple classification instead of introducing a new type of tagging/indexing.

Since the IB has not technical experts available and does not classify documents, the comments below are given from a classification point of view and not from a technical point of view. The comments and proposals below are based on the current *Guide* and reply to the wishes of the initiators of the project, although in a different way.

Secondary/Primary Classifications

The *Guide* does not define what is primary and what is secondary classification. Standards ST.8 and ST.10C do not have any provision for presenting in a different way "primary" and "secondary" classification symbols. What is defined in the *Guide* and in the Standards is the symbol which is presented first on a document. This symbol should represent invention information and it should be the one which most adequately represents the invention. In case of multiple classifications of a document, there is no way to identify which one(s) of the symbol(s) is (are) primary and which is (are) secondary, if any, except the first one.

Since there is no clear definition of what is "secondary" classification, it could be wrongly understood that "secondary" classification is used to classify additional information. This is however in contradiction with the statement made by IPC/WG/20, that the new nanotech scheme has the purpose to "identify places where nanotech-related subdivisions should be created and in identifying documents to be classified therein" and with the decision of the IPC/CE/41 that B82Y should be used to classify either invention or additional information. It is therefore expected that, at least in some cases, invention information will also be classified in the new scheme.

From the search point of view, it makes no difference if a symbol is "primary" or "secondary". When searching a combination of symbols, the result is exactly the same, no matter which one of the symbols in the query is primary and which is secondary. Since, as noted by IPC/WG/20, one of the purposes of the scheme is to serve for searching combinations, calling the B82Y symbols "secondary" would not improve search. However, what is absolutely needed is that both the "primary" (outside B82Y) and the "secondary" (in B82Y) symbols are obligatorily attributed.

What seems to create a problem for some offices, and the latest JP comments clearly demonstrate this, is that "primary" classification is used for dispatching an application to the

appropriate examiner. We would like to point out that in paragraphs 6 and 7 of the *Guide*, there is no indication of such objective for the IPC. Each office has different rules for attribution of applications to examiners; these rules change over time with the evolution of technology. If an office wishes not to use a B82Y symbol for dispatching an application, then this symbol could be excluded and since there will be at least a symbol attributed outside B82, this other symbol could be used for dispatching .

In conclusion, we would like to suggest not using the unclear terms primary, secondary or supplementary classification in the Notes of the new scheme. Instead, it should be indicated that any document classified in B82Y should also obligatorily be classified elsewhere. In addition, similar multiple classification Notes should be provided in those IPC places which explicitly cover nanotechnology, e.g., A61K 9/51 for nanocapsules. Example of such note:

Note A61K9/51

All subject matter classified in this group should also be classified in subclass B82Y even if it is completely covered by this group.

Comments Invited by IPC/WG/21

The IPC Revision Working Group (WG) at its last session invited comments on the following issues.

– "whether the scope of subclass B82B should be broadened to cover nano-structures and their manufacture which are not covered by existing groups B82B 1/00 and B82B 3/00;

From the point of view of the IPC rules, there is no problem in broadening the scope of a subclass. Recently, the scope of subclass G10L was broadened to include "music coding" which had not been explicitly covered before, and there was no objection. We think that currently many offices already classify "other" nanostructures in B82B although they are not explicitly covered. Keeping the scope of B82B unchanged would not reduce reclassification work since reclassification of B82B is unavoidable. Even with Rapporteur's proposal all documents classified in the current B82B should also be classified in B82Y.

One more reason we do not agree with Rapporteur's proposal to include all nanostructures in B82Y is that it would make difficult to retrieve those nanostructures that do not fall under the restricted definition of B82B.

– "in case there was need of scope broadening, whether similar rules of classification as those proposed for subclass B82Y should apply to the new groups to be created in subclass B82B;

We propose to use the same rules as the current B82B. Currently, the practice of classifying in B82B is to a large extent multiple classification using other subclasses; more than 85% of the 15,000 documents classified in B82B are also classified elsewhere in the IPC. In particular, 970 documents are also classified in C08 and 780 documents in C12 (source Espacenet).

– "the amended title and notes proposed for subclass B82B by the Rapporteur and by the Russian Federation (see Annexes 29 and 30 to the project file);

We do not agree to make B82B residual as proposed by RU.

– "the need to include additional main groups in subclass B82Y covering subject matter beyond "specific uses or applications of nano-structures" as proposed by the Rapporteur in said Annex

29;

The following groups have been proposed by Rapporteur and have not yet been approved.

A: Specific properties or effects uniquely attributable to the nanoscale.
B: Measurement or analysis of nanostructures.

Concerning group A, it has been criticized in several comments for being unclear and too broad, and could affect nearly every document classified in B82Y. Rapporteur has never replied to these comments. In a previous Annex, it was suggested to use this group as an index to identify whether the application could indeed be attributed to the nanoscale, or to say it differently, to distinguish “genuine” nanotech from others. It has already been admitted that B82 will be used only for “genuine” nanotech, this group A should therefore be withdrawn.

Concerning group B, we propose to include it in B82Y since the latter is an application place and the rules of classification for B and for B82Y could be similar. In this case, the title of B82Y should be broadened. In principle we agree with the title propose by SE in Annex 35.

– “the title and Notes proposed for subclass B82Y by the Rapporteur and by Russia in said Annexes 29 and 30.”

When drafting this document, comments were submitted by SE and we mostly agree with their comments on this question. However we have some modifications to suggest on the proposed notes:

Notes

(1) ***This subclass covers applications and aspects of nano-structures which are produced by any methods, and is not restricted to those that are formed by manipulation of individual atoms or molecules.*** OK

(2) ***Attention is drawn to the Note following the title of class B82, which defines the meaning of the terms "nano-size", "nano-scale" and "nano-structure" in this subclass.*** OK

(3) ***This subclass is intended to enable a complete search of subject matter related to nano-structures by combination of classification symbols of this subclass and classification symbols from other subclasses. Therefore this subclass covers aspects of nano-structures that*** might ***also be*** entirely or partially covered ***elsewhere in the IPC.***

(4) Subject-matter classified in this subclass should obligatorily be also classified in other classification places***, e.g.: ---***

(5) ***The classification symbols of this subclass are not listed first when assigned to patent documents.*** We do not agree with this note.

(6) ***In this subclass multi-aspect classification is applied, so that aspects of subject matter that are covered by more than one of its groups should be classified in each of those groups.*** OK

United States Patent and Trademark Office

Project: C452 Class – B82 Date: 13 October, 2009

COMMENTS

We would like to express our appreciation to the IB, JP, RU, and SE for their efforts in advancing this project. Our comments below are in response to the views and suggestions expressed by SE in annex 35 and the IB in annex 36.

Secondary/Primary Classifications

IB states that "the *Guide* does not define what is primary and what is secondary classification." The IB further states that "it could be wrongly understood that 'secondary' classification is used to classify additional information." The IB then concludes that "unclear terms" such as primary, secondary or supplementary classification should not be used in the Notes of the new scheme. We concur that primary and secondary classifications are not explicitly defined in the *Guide to the IPC*. However, the *Guide* does employ the terms primary and secondary classification, *cf* paragraph 107. Accordingly, US proposes that the Guide should be revised to clarify the meanings of the terms.

For the convenience of the reader, paragraph 107 from the *Guide* is reproduced here:

SCHEMES FOR SECONDARY CLASSIFICATION

> 107. For a limited number of technical subjects, subclasses for secondary classification are provided in the Classification. These subclasses are used for obligatory supplementary classification according to an aspect of the subject matter that is different from the aspect upon which the primary classification was based. Such subclasses for secondary classification are subclass A01P (Biocidal, pest repellant, pest attractant or plant growth regulatory activity of chemical compounds or preparations), subclass A61P (Therapeutic activity of chemical compounds or medicinal preparations), subclass A61Q (Use of cosmetics or similar toilet preparations) and subclass C12S (Processes using enzymes or micro-organisms).

The notes for all the exemplary subclasses in paragraph 107 (A01P, A61P, A61Q, and C12S) state that the classification symbols of the subject subclass are not listed first when assigned to patent documents. The same would apply to B82Y, as indicated in notes 4 and 5, Rapporteur's proposal annex 29. Therefore, we cannot agree with the IB's suggestion to modify note (4) to read "Subject-matter classified in this subclass should obligatorily be also classified in other classification places***, e.g.: ---".*** Further, contrary to the IB's assertion, note (5) should remain substantively as proposed in annex 29:

> The classification symbols of this subclass are not listed first when assigned to patent documents.

Scope of subclass B82B

The IB is of the view that the scope of existing subclass B82B should be broadened, to cover nano-structures and their manufacture currently outside the purview of this subclass. The IB finds support in the contention that "currently many offices already classify 'other' nanostructures in B82B although they are not explicitly covered." US is of the view that the burden is not so much in reclassifying documents from B82B into the new scheme B82Y. Rather, there are documents scattered throughout the IPC that would have to be reclassified in B82B if the scope of this subclass were to be broadened.

The IB further contends that if all nano-structures were classified in B82Y, it would be difficult to retrieve those nano-structures that do not fall under the restricted definition of B82B. This argument does not appear to be convincing since (1) there are few documents that meet the current restricted definition of B82B and (2) it would be reasonable to assume that documents that receive classification in B82Y but not B82B fall under the looser definition of nano-structures that characterises B82Y.

In view of the fundamental distinctions between nano-structures appropriate for current subclass B82B and the broadened characterization of nano-structures appropriate for B82Y, US favours preserving the original, restricted scope of B82B.

Notes

SE (annex 35) and IB (annex 36) have proposed modifications to the notes for B82Y presented in the Rapporteur's proposal, annex 29.

The comments below address the aforementioned changes.

> *Note (1) This subclass covers applications and aspects of nano-structures which are produced by any methods, and is not restricted to those that are formed by manipulation of individual atoms or molecules.*

Comment: US can agree to SE's proposed changes to note (1), except "methods" should be –method--.

> *Note (2) Attention is drawn to the Note following the title of class B82, which defines the meaning of the terms "nano-size", "nano-scale" and "nano-structure" in this subclass.*

Comment: Note (2) is substantively the same as in Rapporteur's proposal, annex 29, except "class" has been changed "subclass". It appears this note is superfluous since it merely draws attention to the definitions already presented in the class note. Nevertheless, provided the same change is made in note (2) for subclass B82B, we can agree with SE's proposal.

For note (3), US proposes the following text, taking into consideration the changes proposed by SE and the IB:

> Note (3) This subclass is intended to aid in searching for subject matter related to nano-structures, therefore this subclass covers aspects of nano-structures that might also be covered elsewhere in the IPC.

For note (4), we can agree to the text proposed by SE:

> *Note (4) This subclass is for secondary classification, i.e. for obligatory supplementary classification of subject-matter already classified as such in other classification places, e.g.:*

(the specific examples have been omitted here)

In keeping with our view that B82Y is indeed a secondary classification scheme, we cannot agree with the IB's proposed modification to note (4) (Subject-matter classified in this subclass should obligatorily be also classified in other classification places, e.g.: ---)

> *Note (5) The classification symbols of this subclass are not listed first when assigned to patent documents.*

Comment: The IB does not agree with this note. US maintains that note (5) is consistent with the notes in the exemplary subclasses in paragraph 107 of the *Guide* that the classification symbols of these subclasses are not listed first when assigned to patent documents. Therefore, note (5), *supra*, should be retained.

> *Note (6) In this subclass multi-aspect classification is applied, so that aspects of subject matter that are covered by more than one of its groups should be classified in each of those groups.*

Comment: US can accede to the above text proposed by SE for note (6).

Principal Directorate Patent Grant Automation - Directorate Classification		
Project: **C452**	Subject: **Nano-technology**	IPC range: **B82**
Comments		October 2009

Ref.: Annexes 29-37 of project file

Background

Following the approval of subclass B81Y for "Specific uses or applications of nano-structures", comments were invited on:

1. whether the scope of subclass B82B should be broadened to cover nano-structures and their manufacture which are not covered by existing groups B82B 1/00 and B82B 3/00;
2. in case there was need of scope broadening, whether similar rules of classification as those proposed for subclass B82Y should apply to the new groups to be created in subclass B82B;
3. the amended title and notes proposed for subclass B82B by the Rapporteur and by the Russian Federation (see Annexes 29 and 30 to the project file);
4. the need to include additional main groups in subclass B82Y covering subject matter beyond "specific uses or applications of nano-structures" as proposed by the Rapporteur in said Annex 29; and
5. the title and Notes proposed for subclass B82Y by the Rapporteur and by Russia in said Annexes 29 and 30.

EPO comments

1. EPO agrees with JP (A.32), US (A.34), SE (A.35) that **B82B scope should not be broadened**;
2. **not applicable** because B82B scope broadening is not desirable;
3. we prefer the **B82B title as given in A.29 (US)**; we also support **B82B Notes as proposed by SE (A.35, page 1)** – as a minor remark, we wonder whether the order of Note (1) and Note (2) needs to be changed;
4. as to **additional main groups under B82Y, we are ready to discuss any new groups** beyond specific uses or applications (already approved);
5. we prefer the **B82Y title as given in A.29 (US)**; we also fully support **B82Y Notes as proposed by SE (A.35, pages 2-3)** – as a minor remark, we wonder whether the order of Note (1) and Note (2) needs to be changed.

As additional comment, the EPO also takes notes of the latest submissions of the IB (A.36) and US (A.37).
As stated above, EPO fully agrees to Notes (4), (5) and (6) after B82Y as proposed by SE, as well as to the US comments to these Notes in A.37.
On the other hand, if – and we stress **if** – the IPC community were to agree (along IB) that the term "secondary classification" should be avoided, then we would suggest the following simple alternative wording to Note (4) of A.35:

Note (4) after B82Y

This subclass is for obligatory supplementary classification of subject-matter already classified as such in other classification places, e.g. ---

This may obviate the perceived necessity of Note (7) by some offices, whilst other developments in the IPC could receive a Note such as mentioned by the IB in A.36 page 2, for A61K 9/51.

Victor Veefkind & Roberto Iasevoli

DEUTSCHES PATENT- UND MARKENAMT German Patent and Trade Mark Office	Class/Subcl.: **B82** **B82** Date: 16.10.09
DE - Comments — C452	

Re: Comments relating to Annexes 31 – 36 (IB, JP, RU, US, SE, IB)

In the light of the Annexes 32-36, DE wants to comment Annex 31's questions as follows:

1. **… whether the scope of subclass B82B should be broadened to cover nano-structures and their manufacture which are not covered by existing groups B82B 1/00 and B82B 3/00**
2. **… in case there was need of scope broadening, whether similar rules of classification as those proposed for subclass B82Y should apply to the new groups to be created in subclass B82B**

1. DE's experts definitely do not want B82B to be broadened und new groups should not be inserted in B82B respectively.

   The term '"nano-structure" means – as our experts understand it from the daily classification work point of view - an entity having at least one nano-sized functional component that makes physical, chemical or biological properties or effects available, which are uniquely attributable to the nano-scale. The groups 1/00 (Nano-structures) and 3/00 (Manufacture or treatment of nano-structures) in the "old" IPC wording are properly definied in combination with the notes. Why shouldn't we keep it as it is in the "old" IPC?

   DE is not sure, if the modified titles of B82B 1/00 and 3/00, which were adopted at the last meeting of the Working Group, retain the scope of the main groups being currently in force. The reason is, that in our opinion these new maingroup titles do not properly transfer the original terms of the B82B notes 2i and 2ii, i.e. the new wording implies a different technical meaning and comprehension; from DE's point of view the new wording does not cover the same technical scope, but a **limited** one compared to the current IPC (the aspects of note 2i seems to be dropped completely; the aspects of note 2ii is retained but the number of note-2ii–related documents is almost neglectable). If the adopted new titles for B82B 1/00 and 3/00 and the new subclass title for B82B (proposal in Annex 29) are coming into force, only a part of documents, that are classified in B82B up to now, would be classified in the new B82B. DE would be grateful, if the Working Group could reconsider the decision of the last meeting.

2. consequently: No (see 1.)

3. **… the amended title and notes proposed for subclass B82B by the Rapporteur and by the Russian Federation (see Annexes 29 and 30 to the project file)**

3. DE agrees to SE's view in Annex 35.

4. … the need to include additional main groups in subclass B82Y covering subject matter beyond "specific uses or applications of nano-structures" as proposed by the Rapporteur in Annex 29

4. DE's experts think that the scope of B82Y should not be broadened und new groups should not be inserted in B82Y respectively.

The secondary classification scheme of B82Y as proposed in Annex 29 should solely cover specific uses or applications of nano-structures for an optional secondary classification, in case the focus is not lying on the nano-structures itself in the original meaning of nano-technology (see 1.).
There should be no artificial and therefore confusing overlap between B82B and B82Y as SE already pointed out convincingly in its Annex 35 .

5. The title and Notes proposed for subclass B82Y by the Rapporteur and by Russia in said Annexes 29 and 30

DE agrees with the title proposed by the Rapporteur in said Annex 29.

As far as the notes are concerned, our experts share SE's view in Annex 35 to change them as proposed there, because they are more specific and therefore more helpful for practical use.
But DE proposes additionally to delete subitem C01B 31/02 from note no. 4 (SE's Annex 35 / Rapporteur's proposal Annex 29) completely, because it seems not a good example for a place where secondary classification usually should take place. The IPC-title of C01B 31/02 shows no explicit wording or technically stringent phrase that nanostructures of that mentioned type are classified here (in general), compared to the other classes/subclasses of that list. So this example seems somewhat misleading for everyday use.

Klaus Wollny

United States Patent and Trademark Office
Rapporteur Report

Project: C452 Class – B82 Date: November 2, 2009

Rapporteur appreciates the extensive comments received from JP (Annex 32), RU (Annex 33), US (Annexes 34 and 37), SE (Annex 35), IB (Annex 36), EP (Annex 38) and DE (Annex 39) concerning the issues posed by the 21st IPC Revision Working Group (Annex 31). Below, Rapporteur summarizes the responses to the following issues summarized in Annex 31 of the C452 project file:

– **whether the scope of subclass B82B should be broadened to cover nano-structures and their manufacture which are not covered by existing groups B82B 1/00 and B82B 3/00**

JP, US, SE, EP and DE do not support broadening the scope of B82B. JP and US expressed concern that broadening the scope of B82B would confuse users and burden them with reclassification since nano-structures other than those manufactured by the "bottom-up" processes are covered elsewhere in the IPC. Furthermore, broadening the scope of B82B to now include these structures and their manufacture would mean there would be two "primary" classification schemes providing for the same subject matter.

RU proposed creating two additional groups in B82B providing for nano-structures not covered by B82B 1/00 and for manufacture or treatment of nano-stuctures not covered by B82B 3/00, only if B82B is the residual place for all kinds of nano-structures and manufacture thereof.

IB believes there is no problem in broadening the scope of B82B and stated that many offices are currently classifying "other" nano-structures in B82B though these structures are excluded therefrom unless formed through "bottom-up" approaches. IB believes keeping the scope of B82B unchanged would not reduce classification work since reclassification of B82B is unavoidable. IB additionally states they do not agree with R's proposal to include all nano-structures in B82Y because this would make retrieving nano-structures that do not fall under the restricted definition of B82B difficult.

In supplementary comments received from US concerning the IB comments of Annex 36, US believes the reclassification burden is not so much in reclassifying documents from B82B into B82Y, but finding the documents scattered throughout the IPC which would have to be classified into B82B if the scope of this subclass is broadened. US also disagrees with IB's argument that if all nano-structures were classified in B82Y, it would be difficult to retrieve those nano-structures that do not fall under the restricted definition of B82B. US believes that there are few documents that meet the current restricted definition of B82B and that it would be reasonable to assume that documents having classification in B82Y, but not B82B, fall under the broader definition of nano-structures that characterizes B82Y.

Rapporteur opinion:
Rapporteur believes making B82B a residual subclass as proposed by RU would cause borderline problems between B82B and other IPC subclasses causing much confusion in determining where to classify and where to search for various concepts.

Given the majority of commenting offices are in favor of maintaining the more narrow definition of nanotechnology for subclass B82B, Rapporteur proposes that the scope for B82B not be broadened.

– **in case there was need of scope broadening, whether similar rules of classification as those proposed for subclass B82Y should apply to the new groups to be created in subclass B82B**

JP, US, SE, EP and DE do not support broadening the scope of B82B. JP believes that a clear distinction should be made between existing places for primary classification and the new type places for secondary classification. Therefore, JP objects to creating new groups in B82B which follow the rules which will apply in B82Y. US believes it is more logical to include the "new groups" in question in B82Y where the special rules apply rather than B82B.

RU believes the classification rules for B82B should be different taking into account their approach to creating the new B82Y and changing the B82B title as shown in Annex 33.

IB proposes using the same rules as the current B82B since they believe the current practice of classifying in B82B is "to a large extent multiple classification using other subclasses."

Rapporteur opinion:
As with the first question and based on the majority opinion, Rapporteur proposes that the rules which will apply in B82Y not be extended to existing subclass B82B. However, considering the large number of documents classified in B82B, R is sympathetic to the viewpoint that offices may need to revisit their practices for classifying documents into B82B.

– **the amended title and notes proposed for subclass B82B by the Rapporteur and by the Russian Federation (see Annexes 29 and 30 to the project file)**

JP, US and EP support the title proposed in Annex 29 since the title of Annex 30 broadens the scope of B82B and could lead to an unclear borderline between B82B and other existing subclasses. US also supports the notes for B82B proposed in Annex 29.

SE and DE believe the title should be adapted to the scope that is eventually decided.

RU supports the title of Annex 30 and the notes proposed in Annex 33.

IB does not support making B82B residual as proposed by RU.

In Annex 35, SE proposed a modified version of the notes of Annex 29 which DE and EP support though EP questions the order of Notes (1) and (2).

Rapporteur opinion:
Since the majority of commenting offices do not want the scope of B82B broadened, Rapporteur believes the title proposed for B82B in Annex 29 is appropriate. Rapporteur believes the notes proposed by SE in Annex 35 are an improvement and proposes a few minor changes. In note (2), R changed "class" to subclass" to be consistent with the wording of the B82Y notes proposed by SE. In note (3) R believes the word "comprehensive" is more indicative of the search situation than "complete". And finally, R has proposed an additional example for note (4). Concerning notes (1) and (2), Rapporteur believes the order of these notes as proposed by SE is acceptable. Rapporteur has reproduced the notes proposed by SE below with suggested modifications highlighted and underlined.

Proposed B82B notes:

(1) This subclass does not cover chemical or biological nano-structures per se, provided for elsewhere, e.g. in classes C08 or C12.

(2) Attention is drawn to the Note following the title of class B82, which defines the meaning of the terms "nano-size", "nano-scale" and "nano-structure" in this **sub**class.

(3) Subject matter classified in this subclass is further classified in subclass B82Y, in order to enable a ~~**complete**~~ **comprehensive** search of nano-structure technology using classification symbols of B82Y in combination with classification symbols of B82B.

(4) Nano-structures having specialised features or functions are further classified in appropriate places in other subclasses that provide for those features or functions, e.g. in G01Q, G02F 1/017 **or H01L 29/775**.

– **the need to include additional main groups in subclass B82Y covering subject matter beyond "specific uses or applications of nano-structures" as proposed by the Rapporteur in said Annex 29**

JP and US generally support the Rapporteur proposal of Annex 29 since the goal of this project is to "collect all nanotechnology in one place to assure visibility". However, based on RU comments, US agrees that the proposed group B82Y 2/00 might be too broad to be useful.

RU and DE believe only the main groups adopted at WG21 are needed and that B82Y should cover only specific uses or applications of nano-structures. However, RU supports transfer of B82Y 1/00 and 10/00 to B82B.

SE is opposed to the creation of B82Y 1/00 "because every single document disclosing nano-structure could be classified in this main group" which decreases its usefulness for search purposes. SE also is opposed to 2/00 as they believe it to be too broad in scope. SE prefers the scheme to be only for uses and applications, but can accept 9/00 and 10/00 if a majority of offices support these two groups.

IB believes Rapporteur has not replied to previous comments which criticized group 2/00 (In Annex 36, IB labels it "A"-- Specific properties or effects uniquely attributable to the nano-scale) as being unclear and too broad. IB further states that "A" should be withdrawn since "in a previous Annex, it was suggested to use this group as an index to identify whether the application could indeed be attributed to the nanoscale" and that "it has already been admitted that B82B will be used only for "genuine" nanotech group." Concerning group 9/00 (In Annex 36, IB labels it "B" "—Method or apparatus for measurement or analysis of nano-structures), IB supports this group with the idea that the title of B82Y be broadened as proposed by SE in Annex 35 to accommodate its subject matter.

EP is "ready to discuss any new groups beyond specific uses or applications (already approved)".

Rapporteur opinion:
Concerning IB's comment that Rapporteur has not replied to previous comments which criticize group 2/00 (A) as being unclear and too broad, we apologize for the oversight. After reconsidering comments from several offices, R agrees that 2/00 (Specific properties or effects uniquely attributable to the nano-scale) may be too broad to be of any use in that a large number of nano-technology documents could potentially be classified here making a search of this group impractical. Therefore, R agrees to withdraw this group from consideration, if the RWG agrees.

It appears from the comments received that group 9/00 (Annex 29 title--Method or apparatus for measurement or analysis of nano-structures) has some support for remaining in B82Y.

The viewpoints on groups 1/00 and 10/00 are varied, but Rapporteur believes these two groups should remain in B82Y in order to help fulfill the goals of the B82Y scheme which is to provide a universal and readily visible place for all nano-technology subject matter.

– **the title and Notes proposed for subclass B82Y by the Rapporteur and by Russia in said Annexes 29 and 30**

JP generally supports the title and notes of Annex 29. However, with respect to Note (7), JP would have no objections to its deletion if the IPC Guide is modified appropriately to take "said condition" expressed by B82Y Note (7) into account.

RU supports a title for B82Y of "USE OR APPLICATIONS OF NANO-STRUCTURES" based on their previous comments. RU believes B82Y should be used as an "ordinary" classification scheme with obligatory assigning of the B82Y symbol to provide a complete search of nano-documents. New notes were proposed by RU in Annex 33.

SE proposed a new title for B82Y (APPLICATIONS OF NANO-STRUCTURES; MANUFACTURE, TREATMENT, MEASUREMENT OR ANALYSIS OF NANO-STRUCTURES) to more accurately indicate the subject matter of group 9/00 (Method or apparatus for measurement or analysis of nano-structures) and to reflect their opposition to the creation of 1/00 and 2/00. SE also proposed a modified set of notes.

IB mostly agreed with SE's comments of Annex 35 but proposed modifications to Note (3) and Note (4). IB opposed note (5).

US originally supported the title and notes of Annex 29. However, in supplementary comments of Annex 37, US can support the SE proposal of Annex 35 for the B82Y notes with some modifications to Note (1) and Note (3).

EP and DE support the title proposed by Rapporteur in Annex 29.

EP supports the notes as proposed by SE in Annex 35 as well as the US comments of Annex 37, but wonders if the order of Note (1) and Note (2) should be changed.

DE agrees with the notes proposed by SE in Annex 35 but additionally proposes to delete C01B 31/02 from Note (4) because it doesn't seem to be a good example for a place where secondary classification should take place. They state that the title of C01B31/02 shows no explicit wording or technically stringent phrase that nanostructures of that type are classified here, compared to the other subclasses of that list. They believe this example is misleading.

Rapporteur opinion:
Most commenting offices approve of the title proposed by R in Annex 29. Rapporteur believes the existing title in Annex 29 could be improved by replacing the phrase "MEASUREMENT OR ANALYSIS AT THE NANO-SCALE" with the wording proposed by SE in Annex 35 "…. MEASUREMENT OR ANALYSIS OF NANO-STRUCTURES" which does more clearly reflect the title of group 9/00. The resulting title for B82Y would therefor be "NANO-STRUCTURES IN GENERAL; MANUFACTURE, TREATMENT OR PROPERTIES THEREOF; APPLICATIONS OF NANO-STRUCTURES; MEASUREMENT OR ANALYSIS OF NANO-STRUCTURES."

The modified notes proposed by SE in Annex 35 received support with some changes proposed by IB and US. Concerning notes (1) and (2), Rapporteur believes the order of these notes as proposed by SE is acceptable. The changes proposed by IB are based on their position that B82Y should not be treated as a "secondary scheme" according to Guide paragraph 107 and since this has not been approved by the RWG, Rapporteur has only included the notes as proposed by SE with US and Rapporteur modifications. These notes proposed by SE are reproduced below with modifications by R and US highlighted and underlined.

With respect to Note (7), R believes further discussion of possible modification of the IPC Guide can be continued in project CE421 or other related projects if desired.

Concerning deleting C01B 31/02 from Note (4), Rapporteur believes that even though no explicit wording in the title of C01B 31/02 relates to nano-structures, implicitly bucky balls per se, nanotubes per se, etc. are classified in this area of the IPC. However, RWG can decide on the usefulness of the inclusion of C01B 31/02 in the list of note (4).

Proposed B82Y notes:

(1) This subclass covers applications and aspects of nano-structures which are produced by any method**s**, and is not restricted to those that are formed by manipulation of individual atoms or molecules.

(2) Attention is drawn to the Note following the title of class B82, which defines the meaning of the terms "nano-size", "nano-scale" and "nano-structure" in this subclass.

(3) This subclass is intended to ~~**enable a complete search of**~~ **aid in searching for** subject matter related to nano-structures~~**, by combination of classification symbols of this subclass and classification symbols from other subclasses. T**~~ therefore this subclass covers ~~**nano-structures and**~~ aspects of nano-structures that ~~**can**~~ **might** also be ~~**classified**~~ **covered** elsewhere in the IPC.

(4) This subclass is for secondary classification, i.e. for obligatory supplementary classification of subject-matter already classified as such in other classification places, e.g.:
B82B Nano-structures formed by individual manipulation of atoms, molecules, or limited collections of atoms or molecules as discrete units; Manufacture or treatment thereof
A61K 9/51 Nano-capsules for medicinal preparations
B05D 1/20 Langmuir-Blodget films
C01B31/02 Carbon nano-structures, e.g. bucky-balls, nanotubes, nanocoils, nano-doughnuts or nano-onions
G01Q Scanning probes techniques; Apparatus structure and manufacture thereof; Scanning probe microscopy
G02F 1/017 Optical quantum wells or boxes
H01F 10/32 Nano-structured thin magnetic films

H01F 41/30 Molecular beam epitaxy (MBE)
H01L 29/775 Quantum wire FETs

(5) The classification symbols of this subclass are not listed first when assigned to patent documents.

(6) In this subclass multi-aspect classification is applied, so that aspects of subject matter that are covered by more than one of its groups should be classified in each of those groups.

Miscellaneous issues raised by commenting Offices:

In addition to the comments on the 5 questions posed by the RWG, the following comments were received.

IB states that the Guide does not define what is primary and what is secondary classification nor do Standards ST.8 and ST.10C provide for presenting primary and secondary classification symbols in a different way. Furthermore, since they believe there is no clear definition of what is "secondary" classification it could be incorrectly understood that "secondary" classification is used to classify only additional information and not invention information. IB believes from the search point of view it makes no difference whether a symbol is primary or secondary and that calling the symbols for B82Y secondary would not improve search. They point out that the objectives of the IPC do not include aiding in dispatching applications to appropriate examiners so whether symbols are primary or secondary should not matter. The IB propose not using the terms primary, secondary, or supplementary classification in the notes of the new scheme B82Y. Instead, they suggest that any document classified in B82Y should also obligatorily be classified elsewhere. In addition they suggest providing notes in those IPC places which explicitly cover nanotechnology, e.g. A61K 9/51 for nanocapsules. They propose the following example for such a note:

Note A61K 9/51
All subject matter classified in this group should also be classified in subclass B82Y even if it is completely covered by this group.

In supplementary comments of Annex 37, US believes the Guide does employ the terms "primary and secondary classification" in paragraph 107 and suggests that if necessary, this paragraph can be revised to more clearly define these terms. US further explains that the notes in the exemplary subclasses in paragraph 107 (A01P, A61P, A61Q, and C12S) clearly state that the classification symbols of the subject subclass are not listed first when assigned. The same would apply to B82Y as indicated in the notes proposed by Rapporteur and modified by SE.

Though EP fully agrees with the Notes (4)-(6) as proposed by SE and modified by US (A-37), EP also states that if, and they stressed **if**, the IPC community agrees that the term "secondary classification" be avoided they have an alternative proposal for Note (4):

"*This subclass is for obligatory supplementary classification of subject matter already classified as such in other classifications places, e.g. ---*".

EP believes this may obviate the necessity of Note (7) by some offices and suggest that other developments in the IPC could receive a Note such as mentioned by the IB in A-36 for A61K 9/51.

DE questions "whether the modified titles of B82B 1/00 and 3/00 which were adopted at the last meeting of the Working Group, retain the scope of the main groups being currently in force." DE doesn't believe the new titles reflect the meaning of the existing B82B notes 2i and 2ii. DE believes the new titles do not cover the same technical scope but a limited one compared with the current IPC. DE believes the aspects of note 2 (i) are not covered by the new titles. DE requests that the Working Group reconsider its decision on these two titles.

Rapporteur opinion:
With respect to possible modification of the IPC Guide, R believes further discussion should be continued in project CE421 or other related projects if desired. In the meantime, Rapporteur believes the terms to be used in the proposed notes for B82Y, "secondary classification" or "obligatory supplementary classification", are already in the Guide in paragraph 107 and are therefore well-known to users of the IPC. Concerning incorporation of notes in existing IPC places that explicitly cover nano-technology, R can provide a listing of existing IPC groups that would benefit from such a note if directed to do so by the RWG.

In answer to the concerns of DE, Rapporteur does not believe the modified titles for B82B 1/00 and 3/00 change the existing scope of B82B. These new titles were adopted merely to clarify the relationship between this area to

other areas in the IPC, including new subclass B82Y and to reiterate what the notes under B82B state. Rapporteur is unclear how the new titles are more limited than the original scope in that they include both the idea of formation from an atom, molecule or limited collection of atoms or molecules (Note (2) i) and they are formed by manipulating individual atoms, molecules, etc. as discrete units (Note (2) ii). Rapporteur believes the titles approved properly reflect the original scope of B82B.

Finally, Rapporteur will submit a Rapporteur proposal once the B82B and B82Y notes are approved and the future of groups B82Y 1/00, 2/00, 9/00 and 10/00 (as presented in Annex 29) are confirmed.

ANNEX 41

Principal Directorate Patent Grant Automation - Directorate Classification		
Project: **C452**	Subject: **Nano-technology**	IPC: **B82**
Comments		4 November 2009

Ref.: Annex 40 of project file

EPO approves the content and layout of Notes (1)-(4) for B82B and Notes (1)-(6) for B82Y as proposed by **R** in annex 40.
As far as any additional main groups under B82Y (beyond those already approved), EPO would be ready to discuss any proposal – as we stated earlier.

Victor Veefkind & Roberto Iasevoli

JAPAN PATENT OFFICE

November 10, 2009

Project: C452 Subclass: B82B

Comment

JP thanks US Rapporteur for the latest Report in Annex 40 thoroughly analyzing various comments and opinions posted since after the Working Group decision excerpted as Annex 31. On our part, JP would like to present our comments on the postings by several offices after Annex 31 and R. Report of this time.

1. Rules of B82B

As JP already expressed in Annex 32, JP is desirous of retaining subclass B82B in the present state and, therefore, supports R's opinion in Annex 40. Below is an additional comment addressed to the IB's comment in Annex 36.

Pointing out the fact that B82B has actually been given to many documents, for most of which (more than 85%) as the multiple classification, IB argued that it would be sufficient if the scope of B82B were broadened and were used as multiple classification. As a matter of fact, the JPO has been giving B82B to many documents, even beyond the current scope of B82B out of necessity for enabling efficient searches among the documents dealing with nanotechnology. That is one of the reasons why JP hopes for having B82Y created. The fact that B82B has currently been given as the multiple classification would support the claim that the to-be-created B82Y should be utilized as an auxiliary classification.
As concerns the cost for reclassification when the current scope of B82B were retained, which issue was raised by IB, JP agrees with the adverse opinion of US in Annex 37.

2. Title and Notes of B82B

JP support R's opinion and proposal in Annex 40 with respect to the title of B82B and Notes thereafter.

3. Title and Notes of B82Y

JP can approve the B82Y Notes as proposed in Annex 40.

In Annex 36, IB expressed opposition to Note(5) in Annex 29 reading "The classification symbols of B82Y are not listed first when assigned to patent documents." It appears that the objection is based on the following two points and JP would like to try to refute each of them.

(I) IB stated that the order of listing of classification is not important as far as search is concerned. However, it is possible under some of the existing systems to extract the classification that was listed first in the document. For example, assuming that it were intended to take statistics, after duplication excluded, on the question of which technical fields those patent documents relating to nanotechnology belong to, it would be appropriate to do so by the symbol listed first in the document after selecting documents classified in B82Y. Thus, there may be cases where the classification listed first must be specially treated.

In the search for extracting prior art documents, it may be that the order of classification does not at present have any significant meaning as IB remarked. Nevertheless, along with the continuing development of search tools, there may be practiced such documentary prior art searches as are taking the order of listing into account. It would not be desirable to narrow the future possibility based on the recognition of present status.

(II) Referring to a JP comment, IB remarked that it is not one of the objectives of IPC to distribute patent applications among examiners. The JPO system in fact determines responsible examiner depending on the IPC listed first in the document. On the other hand, since B82Y to be created is a universal classification, JP would not plan to use B82Y for distribution purpose. Thus, JP would not wish that B82Y be listed first in the document and, therefore, JP strongly hopes that Note(5) be retained.

As concerns the title of B82Y, it shall be determined depending on which main groups are going to be provided under this subclass. JP would wish that all of the main groups presented in Annex 29 would be adopted. However, if an agreement to that effect is going to be achieved at the coming IPC/RWG22, it would be acceptable to remove B82Y 2/00, as R mentioned in Annex 40.

4. Miscellaneous issues raised by commenting Offices

JP supports R's opinion expressed in Annex 40 in connection with the necessity of secondary classification and in connection with the answer to DE comment. Below are additional JP comments on each of the points.

(1) Secondary Classification

In Annex 36, IB stated that there was no definition of primary/secondary classification in the IPC Guide. However, as US pointed out in Annexes 37 and 40), "secondary classification" is clearly mentioned in paragraph 107. That is, "secondary classification" is the one given "for obligatory supplementary classification" in addition to properly given IPC classification in ordinary procedure. In fact, 4 subclasses are provided to be utilized for such a scheme and have actually been utilized without confusion or mix-up. It does not appear to have been caused any confusion, as IB feared, between secondary classification and additional information on the occasion of utilization of the said 4 subclasses.

JP believes that, if we must resolve the problem that the difference between primary and secondary classifications is not clear and the problem that "some contradictions and confusions arise" in connection with the multiple classification, the correct method would be to revise the Guide for clarification and to enable to give classification that would suit users' expectation.

(2) Titles of B82B 1/00, 3/00 and the scope of existing B82B

DE claimed that the titles adopted for B82B 1/00 and 3/00 at the WG meeting do not properly represent the scope of current B82B. Ground of DE argument is that Note2i after the title of B82B is not reflected therein.

As far as JP understands it, Note2i and Note2ii after the title of B82B are in the AND relationship and the adopted new titles for 1/00 and 3/00 do reflect the contents of Note2ii at the same time with reflecting the contents of Note2i by way of the term "nanostructures" (which, in turn, is defined in the Note after B82). In other words, the scope of current B82B is determined by the logical multiplication of Note2i and Note2ii wherein, in reality, the scope is restricted by Note2ii. The scope of B82B as such is quite limited, as DE pointed out, so that B82B is considered insufficient for treating "nano-structures." On the other hand, those "nano-structures" that are out of the scope of B82B are regarded as being covered by the scope of other subclasses. It is to these "nano-structures" that B82Y is planned to be given universally and supplementary.

IPC/C 453
ORIGINAL: English/French
DATE: 12.11.2009

WORLD INTELLECTUAL PROPERTY ORGANIZATION
ORGANISATION MONDIALE DE LA PROPRIÉTÉ INTELLECTUELLE

GENEVA/GENÈVE

COMMITTEE OF EXPERTS OF THE IPC UNION
COMITÉ D'EXPERTS DE L'UNION DE L'IPC

CL REVISION PROJECT FILE
DOSSIER DE PROJET RÉVISION NIVEAU DE BASE

PROPOSAL BY : **WG** **PROPOSITION DE :**	**IPC AREA:** **G01M & H01T** **DOMAINE DE LA CIB :**
RAPPORTEUR : **EP**	**TECHNICAL FIELD :** **E** **DOMAINE TECHNIQUE :**

ANNEX/ ANNEXE	CONTENT/CONTENU		ORIGIN/ ORIGINE	DATE
25	List of cross references	Liste des renvois	IB	31.08.2009
24	Proposal - RCL	Proposition - RCL	EP	04.08.2009
23	Working Group decision	Décision du groupe de travail	IB	03.08.2009
22	Rapporteur proposal	Proposition du rapporteur	EP	26.03.2009
21	French version	Version française	EP	10.02.2009
20	Working Group decision	Décision du groupe de travail	IB	07.01.2009
19	Comments	Observations	CA	21.11.2008
18	Comments	Observations	JP	21.11.2008
17	Comments	Observations	US	20.11.2008
16	Comments	Observations	GB	20.11.2008
15	Rapporteur report	Rapport du rapporteur	EP	13.11.2008
14	Comments	Observations	JP	21.10.2008
13	Comments	Observations	RO	17.10.2008
12	Comments	Observations	CA	08.10.2008
11	Comments	Observations	US	06.10.2008
10	Rapporteur proposal	Proposition du rapporteur	EP	02.10.2008
9	Rapporteur report	Rapport du rapporteur	EP	02.10.2008

ANNEX/ ANNEXE	CONTENT/CONTENU		ORIGIN/ ORIGINE	DATE
8	Comments	Observations	JP	04.09.2008
7	Comments	Observations	SE	02.09.2008
6	Comments	Observations	RU	02.09.2008
5	Comments	Observations	DE	14.08.2008
4	Rapporteur proposal	Proposition du rapporteur	EP	07.08.2008
3	Working Group decision	Décision du groupe de travail	IB	26.06.2008
2	Comments	Observations	CA	19.06.2008
1	Rapporteur proposal	Proposition du rapporteur	EP	16.06.2008

EXCERPT FROM DOCUMENT IPC/WG/21/2
EXTRAIT DU DOCUMENT IPC/WG/21/2

REPORT ON THE SEVENTH SESSION OF THE IPC ADVANCED LEVEL SUBCOMMITTEE

17. Since the seventh session of the ALS was the final one, all pending A projects were included in the program of the Working Group. From now on, A projects will designate revision projects originating from the IP5 Offices and C projects will designate revision projects that would be included in the IPC revision program by the Committee. For practical reasons, the schemes adopted by the ALS in the framework of projects A 012, A 013, A 014, A 017, A 018 and A 020 were included in the Technical Annexes of this session (see Technical Annexes 1 to 7 and 9 to this report).

IPC REVISION PROGRAM

General

25. The Working Group noted the decision by the Committee of Experts at its forty-first session that revision projects, including advanced level revision projects, would be considered by the Working Group and forwarded to the Committee for final adoption after completion. It was noted that projects originating from the Trilateral or the IP5 Offices cooperation will be designated by the letter "A" and revision projects included in the IPC revision program by the Committee will be designated by the letter "C" (see paragraph 17, above).

26. Discussions were based on compilations of the relevant revision project files. The Working Group considered nine pending C projects, plus 17 A projects forwarded from the former ALS, and approved amendments relating to those projects (see Technical Annexes 1 to 29 to this report relating to revision projects). The status of those projects and the list of future actions and deadlines are indicated in Annex III to this report.

IPC Revision Projects

27. The Working Group made the following observations with respect to the IPC revision projects. All references to annexes in this paragraph refer to annexes of the corresponding project file, unless otherwise stated.

Project C 453 (electrical) – The Working Group approved, with some amendments, the French version of Annex 21 (see Technical Annexes 24F to 27F to this report), and the amendments to the definitions of subclass G01M in Annex 22 (project D 027). It was agreed to consider whether the already approved amendments had an impact on the definitions of subclass G01R (project D 179) in the framework of project D 179, as the project was still ongoing.

The Rapporteur was requested to prepare a RCL, and the International Bureau was invited to provide a CRL, for consideration at the next session of the Working Group.

RAPPORT SUR LA SEPTIÈME SESSION DU SOUS-COMITÉ CHARGÉ DU NIVEAU ÉLEVÉ DE LA CIB

17. Étant donné que la septième session de l'ALS était la dernière, tous les projets A en instance ont été inscrits au programme du groupe du travail. Dorénavant, les projets A désigneront les projets de révision émanant des offices de l'IP5 et les projets C désigneront les projets de révision qui seront inscrits au programme de révision de la CIB par le comité. Pour des raisons pratiques, les schémas adoptés par l'ALS dans le cadre des projets A 012, A 013, A 014, A 017, A 018 et A 020 ont été inclus dans les annexes techniques du rapport sur la session en cours (voir les annexes techniques 1 à 7 et 9 du présent rapport).

PROGRAMME DE RÉVISION DE LA CIB

Généralités

25. Le groupe de travail a pris note de la décision prise par le comité d'experts à sa quarante et unième session selon laquelle les projets de révision, y compris ceux relatifs au niveau élevé, seront examinés par le groupe de travail et transmis au comité pour adoption définitive une fois achevés. Il a été pris note du fait que les projets émanant des offices de la coopération trilatérale ou de l'IP5 seraient désignés par la lettre "A" et que les projets de révision inscrits au programme de révision de la CIB par le comité seraient désignés par la lettre "C" (voir le paragraphe 17).

26. Les délibérations ont eu lieu sur la base de synthèses des dossiers de projet correspondants. Le groupe de travail a examiné neuf projets C en instance ainsi que 17 projets A transmis par l'ancien ALS et a approuvé les modifications relatives à ces projets (voir les annexes techniques 1 à 29 du présent rapport relatives aux projets de révision). L'état d'avancement de ces projets et la liste des mesures à prendre et des délais correspondants font l'objet de l'annexe III du présent rapport.

Projets de révision de la CIB

27. Le groupe de travail a formulé les observations ci-après concernant les projets de révision de la CIB. Dans le présent paragraphe, tout renvoi à des annexes désigne, sauf indication contraire, les annexes du dossier de projet correspondant.

Projet C 453 (électricité) – Le groupe de travail a approuvé, sous réserve de certaines modifications, la version française figurant à l'annexe 21 (voir les annexes techniques 24F à 27F du présent rapport) ainsi que les modifications des définitions de la sous-classe G01M figurant à l'annexe 22 (projet D 027). Il a été convenu d'examiner si les modifications déjà approuvées avaient une incidence sur les définitions de la sous-classe G01R (projet D 179) dans le cadre du projet D 179, celui-ci étant encore en cours.

Le rapporteur a été prié d'établir une table de concordance et le Bureau international une table des renvois croisés, pour examen par le groupe de travail à sa prochaine session.

ANNEXE 24F **F23Q** **[Projet-Rapporteur : C453/EP] <WG21> [Tr.: EP]**

CL U **3/00** < Inchangé >

CL M **23/00** **Vérification des installations d'allumage** (particulières aux moteurs à combustion interne **F02P 17/00**; essai des bougies d'allumage **H01T 13/58**)

ANNEXE 25F **G01M** **[Projet-Rapporteur : C453/EP] <WG21> [Tr.: EP]**

CL U **Titre** < Inchangé >

CL D 19/00 (transféré en **G01M 99/00**)

CL D 19/02 (transféré en **H01T 13/58**)

CL N ***99/00*** ***Matière non prévue dans les autres groupes de la présente sous-classe***

ANNEXE 26F **G01R** **[Projet-Rapporteur : C453/EP] <WG21> [Tr.: EP]**

CL D 31/38 (transféré en **H01T 13/60**)

ANNEXE 27F **H01T** **[Projet-Rapporteur : C453/EP] <WG21> [Tr.: EP]**

AL U 4/10 < Inchangé >

AL C ***13/00*** ***Bougies d'allumage***

CL only C ***13/00*** ***Bougies d'allumage*** *(combinées ou associées avec des injecteurs de combustible **F02M 57/00**; combinées structuralement avec d'autres parties de moteurs à combustion interne **F02P 13/00**)*

AL N *13/58* · *Essai (essai des caractéristiques de l'étincelle d'allumage dans les moteurs à combustion interne **F02P 17/12**)*

AL N *13/60* · · *des propriétés électriques*

AL M 21/04 · · Nettoyage (moyens de nettoyage automatique **H01T 13/54**; dispositifs de traitement au jet abrasif pour nettoyer les bougies d'allumage **B24C 3/34**)

AL U 21/06 < Inchangé >

Principal Directorate Patent Grant Automation - Directorate Classification		
Project: **C453**	Subject: **Testing of Sparking Plugs**	IPC range: **H01T**
Proposal for Revision Concordance List (RCL)		4 August 2009

RCL

	from	**to**
D	G01M 19/00	G01M 99/00
D	G01M 19/02	H01T 13/58
D	G01R 31/38	H01T 13/60

WORLD INTELLECTUAL PROPERTY ORGANIZATION	
IPC REVISION WORKING GROUP	
Project: **C 453:** G01M & H01T List of cross references	Date: July, 2009

References affected by revision project C 453 (G01M & H01T)

Del. or C-mod existing group	**Ref to this group**	**Proposed amendment**	**Comment**
G01M 19/00	G01M subclass Index	**Subclass index** TESTING STATIC OR DYNAMIC BALANCE OF MACHINES OR STRUCTURES **1/00** INVESTIGATING FLUID-TIGHTNESS; ELASTICITY **3/00**; **5/00** VIBRATION- OR SHOCK-TESTING **7/00** SPECIAL APPLICATIONS Aerodynamic; hydrodynamic testing **9/00**; **10/00** Optical testing **11/00** Mechanical or engine testing **13/00**, **15/00**, **17/00** ~~OTHER TESTING OF STRUCTURES OR OF APPARATUS NOT PROVIDED FOR ELSEWHERE~~ *SUBJECT MATTER NOT PROVIDED FOR IN OTHER GROUPS OF THIS SUBCLASS* ~~——————————~~**G01M 99/00**	
G01M 19/02	F02P 17/12	Testing characteristics of the spark, ignition voltage or current ~~(testing of sparking plugs G01M 19/02)~~	
G01R 31/38	None		
H01T 13/00	None		